F4184 SANCTUARY 14" PENDANT INSTALLATION INSTRUCTION

TROY LIGHTING

WARNING

DISCONNECT POWER BRFORE RE-LAMPING OR WIRING THE FIXTURE
READ ALL INSTRUCTIONS COMPLETELY BEFORE STARTING INSTALLATION.

CAUTION

- **TO AVOID THE RISK OF FIRE OR SHOCK, FIXTURE MUST BE INSTALLED IN COMPLIANCE WITH ALL APPLICABLE NATIONAL AND LOCAL ELECTRICAL/BUILDING CODES.**
- **INSTALLATION AND MAINTENANCE OF THIS UNIT REQUIRES AN ELECTRICIAN OR CERTIFIED FACTORY TRAINED TECHNICIAN.**
- **If an existing fixture is being replaced, remove it and note to which of the wires in the outlet box the fixture was attached. DO NOT SEPARATE ANY OTHER WIRES THAT MAY BE IN THE BOX. DO NOT DAMAGE THE INSULATION OF OLDER WIRING. In regular circumstances the BLACK wire will be the "Hot" lead and the WHITE wire will be the "Neutral" or "Common" lead A GREEN or BARE COPPER wire is the "Ground". In older buildings it is always good practice to reconfirm the polarity of the wiring.**

NOTICE

- **The important safeguards and instructions outlined on this sheet cannot cover all possible conditions and situations that may occur. it must be understood that common sense, caution and care factors that cannot be built into any product. Caution and care must be supplied by the person(s) installing, operating and caring of this lighting fixture.**
- **This fixture is designed to be mounted on a correctly installed standard round or octagon box or a through wiring box with a plaster frame. The box must be securely mounted to the structure of the building. The crossbar and hardware supplied should be used. directly mounting the fixture to the outlet box may make it impossible to correctly align the fixture.**
- **This fixture is supplied with with a 4-pcs. stem. There is one 6" section, two 12" section and one 18" section. This feature allows the fixture to be mounted with a stem up to 48" in length in 6" increments.**
- **This fixture is supllied with a swivel. By rotating the canopy the fixture may be mounted to angled ceiling.**

FIXTURE PREPARATION

1. Remove the fixture, metal frame, parts and parts bag(s) from the carton.

NOTICE
Before discarding the carton, double check to make certain that all parts are found.

FIXTURE INSTALLATION

1. Determine the overall desired length of the fixture. Assemble the stems one at a time onto the fixture leads. Tape the end of the leads to a stiff wire (coat hanger) to aid in pulling them through the stems. Place the canopy onto the stem before assembling the top stem section and swivel.
Attach the safety cable to the buidling structure or brace. See figure-1.

NOTICE:
THIS LUMINAIRE MUST BE MOUNTED OR SUPPORTED INDEPENDENTLY OF AN OUTLET BOX.

WARNING
REFER TO THE ILLUSTRATION FOR CORRECT AND SAFE INSTALLATION OF SAFETY CABLE. FAILURE TO FOLLOW THIS INSTRUCTION COULD RESULT HARM/DAMAGE TO THE FIXTURE, PROPERTY AND/OR PERSON(S)!

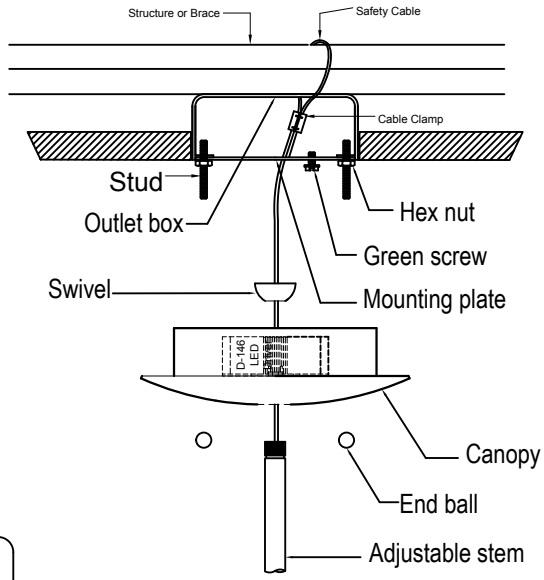

FIGURE-1

2. Attach the mounting plate to the outlet box. (The green screw should face the floor.). Back out the scrwes 1/2 turn to allow the ring to rotate.

3. Thread the studs into the mounting plate at the spacing that matches the mounting holes in the canopy. Thread the small hex nuts onto the studs. Adjust the studs so they extend 3/16" beyond the canopy of the fixture. Lock the hex nuts against the mounting plate.

4. Cut off the excess ground and fixture wire 6" beyond the canopy. Strip 1#2" of insulation from the ends of the wire. Twist the wire stands together.

5. Fasten the ground wire to the green or bare copper wire in the outlet box or the green screw on the mounting ring.

WARNING

Never fasten the ground wire to the black or "hot" wire! Failure to follow this instruction could result in serious injury or death!

6. Fasten the white fixture lead of LED driver to the white wire in the junction box. Fasten the wires together with an approved fastener (wire nut). Starting about 1" below the fastener, tightly wrap the connection with electrical tape so that the connections seals the end of the fastener.

WARNING

Make sure that there is no exposed wire or strands that could cause a dangerous short circuit!

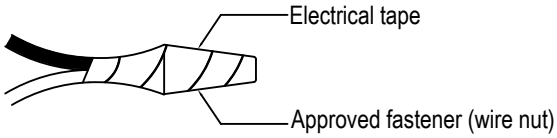

7. Connect the LED driver's brown wire to the black wire in the outlet box. Fasten the joined wires as in step 6.

8. Using the end balls, loosely fasten the fixture to the mounting plate. Rotate and align the canopy as necessary .Tighten the end balls.

9. Restore power to circuit at breaker or fuse box.

NOTICE:
Must use a ELV Dimmer with LED's on this fixture.
***Lutron Maestro dimmer not compatible.**

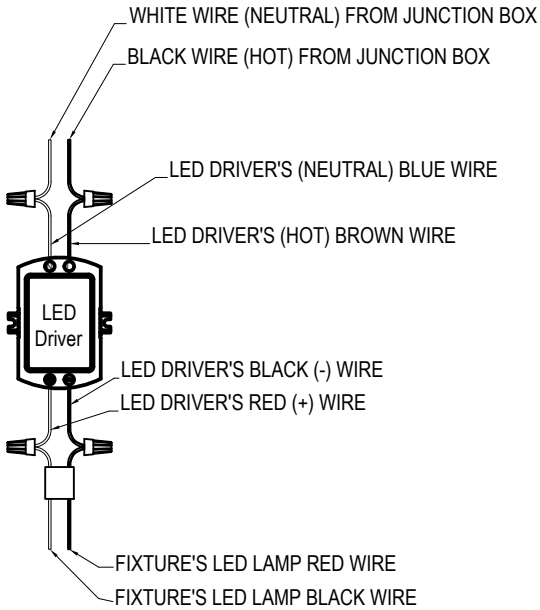

LED LAMP TO LED DRIVER WIRE CONNECTION DETAILS

FIGURE-2

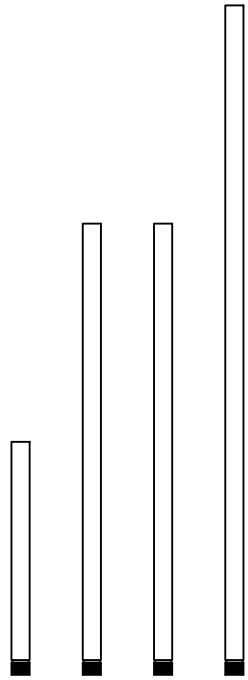

ADJUSTABLE STEM

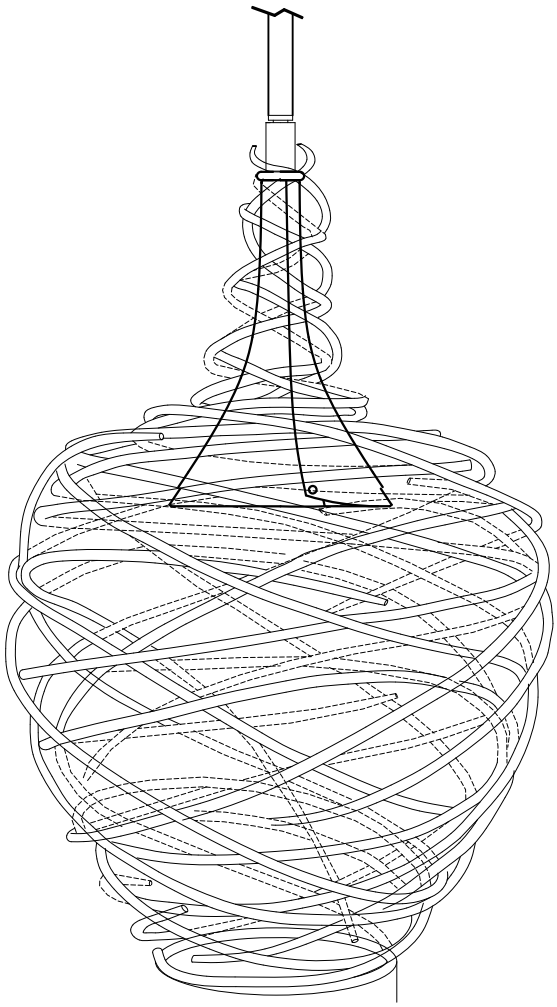

FIGURE-3