Strom Plumbing
BY
Sign of the Crab

Ph: (916) 638-2722 / Fax: (916) 638-2725

Installation Information

ITEM #P1015
Thermostatic Deck Mount Faucet, 7” Centers

Warranted only when installed by a qualified, licensed plumber. Please use Teflon tape on all threaded connections.

1. Shut off the water supply to the fixture before installation.
2. Connect the shorter threaded ends of the hook-up nipples to the deck mount couplers.
3. Loosely attach the deck mount coupler nuts and screen washers to the faucet. Insert the nipples through the 2 holes in the deck. Screw the lock nuts onto the threaded nipples and tighten to secure faucet to deck/tub.
4. Tighten the nuts of the deck mount couplers to the faucet body once positioned correctly.
5. Install the handheld bracket to the elbow.
6. Attach the nut end of the hose to the elbow outlet and the tapered end onto the handheld unit.
7. Place the handshower onto the bracket.
8. Make no adjustments to valves or valve stems. They are tested at the factory for optimum performance.

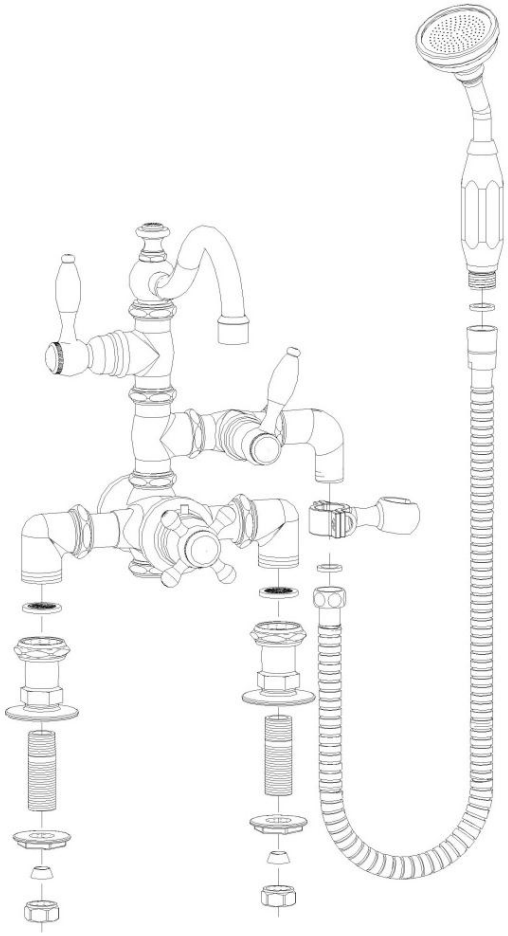

This faucet is tested to remain within 1 degree Fahrenheit of your desired setting throughout its operation, with an automatic temperature stop at 104 degrees Fahrenheit. The unit also has a built-in anti-syphon.

Parts Included:

- Faucet Body w/Handles
- Couplers w/screen washers (pair)
- Nipple hook-up kit
- Handheld Shower w/ Hose and washers
- Handheld Bracket