QUOIZEL
6 CORPORATE PARKWAY
GOOSE CREEK, SC. 29445
www. quoizel. com

INSTRUCTION SHEET IS-DX1718
STYLE NUMBER: DX1718C

PACKAGE CONTENTS

Revised 2008-11-05

Part	Description	Quantity
A	Crossbar	1pc
B	Green Ground Screw	1pc
C	Mounting Screw	2pcs
D	Lock Washer (for #8-32 Screw)	2pcs
E	Hex Nut (for #8-32 Screw)	2pcs
F	Mounting Ball	2pcs
G	Hex Nut (1/8IP)	1pc
H	Stem	1pc
I	Lock Ball	4pcs
J	Rubber Washer	2pcs
K	Finial	1pc
L	Fixture Assembly	1pc
M	Shade	1pc
N	Glass Panel	1pc

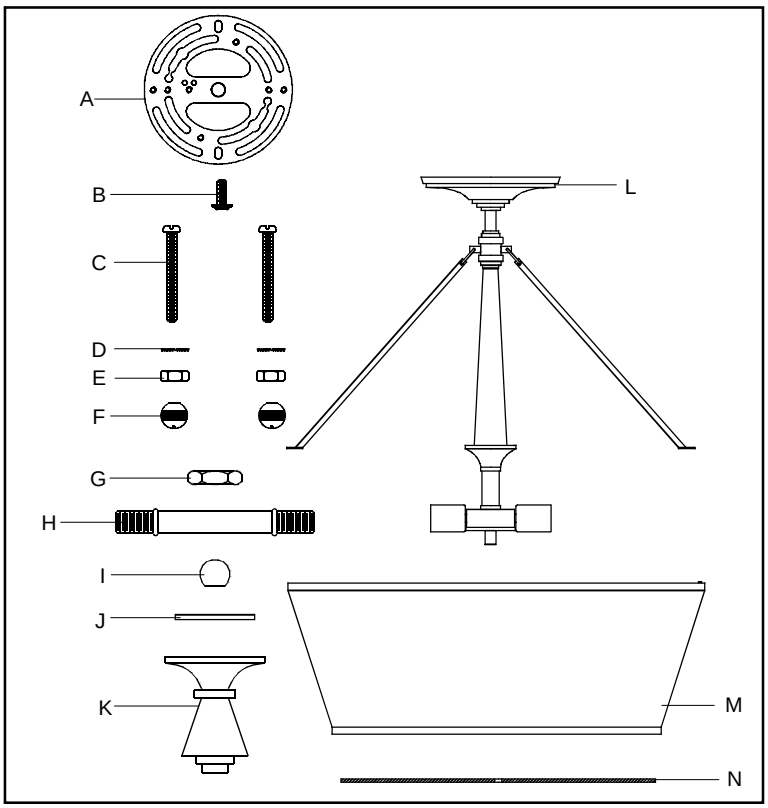

WARNINGS AND CAUTIONS

WARNING:
● Before beginning the installation, turn off electricity at the circuit breaker box or the main fuse box by switching off the circuit breaker or removing the fuse.
CAUTIONS:
● These instructions are provided for your safety. It is very important that they are read completely before the installation of your fixture. We strongly recommend that a professional electrician install the fixture.
● Disconnect fixture from the power source before replacing the bulb(s), making sure the bulb(s) had sufficient time to cool down. DO NOT subject the lamp to any shock while lit as shattering of lamp may result.

PREPARATION

● Before beginning installation of product, make sure all parts are present. Compare parts with package contents list and diagram above. If any part is missing or damaged, do not attempt to assemble, install or operate the product. Contact customer service for replacement part.
● Estimated Assembly Time: 30 – 45 minutes
● Tools Required for Assembly (not included): Flathead screwdriver, Phillips screwdriver, pliers, electrical tape, wire cutters, safety glasses &3, 60 Watt, Type-A Medium Base Bulbs.
● Helpful Tools (not included): Wire Strippers.

STEP 1:

a. Screw the Mounting Screws into the Crossbar, place the Lock Washers over the Mounting Screws and thread the Hex Nuts onto the Mounting Screws as shown. Secure the position of the Mounting Screws by tightening the Hex Nuts against the Crossbar.

b. Secure the Crossbar to the Outlet Box with Outlet Box Screws.

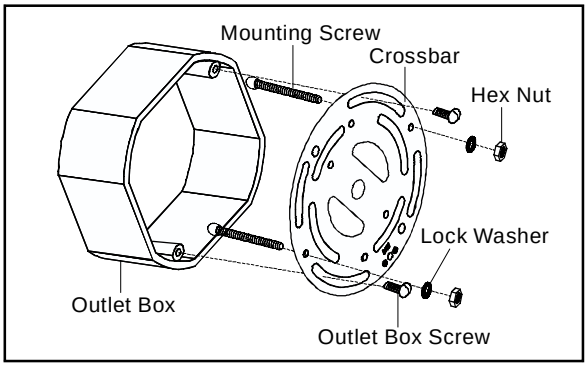

STEP 2 :

a. Refer to Step 3 – Wire Connections to connect wires.

b. Place Fixture Canopy onto Outlet Box aligning 2 holes in the Backplate with 2 Mounting screws threaded on the Crossbar and secure it against wall with Mounting Balls.

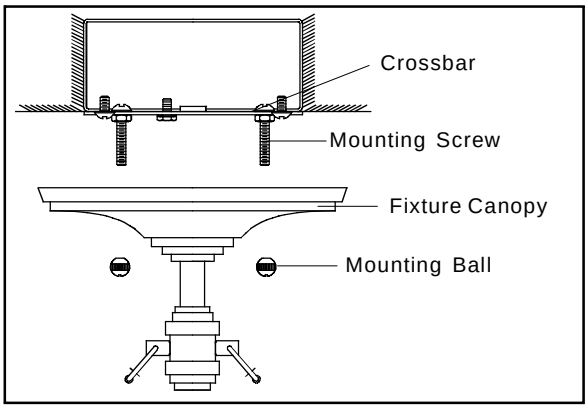

STEP 3:

*Use Wire Connectors (not supplied) to connect the wires.

a. Connect the House Ground Wire to the Fixture Ground Wire.

b. Connect the House White (or Ribbed) Wire to the Fixture Supply Wire (White or Ribbed Side).

c. Connect the House Black (or Red) Wire to the Fixture Supply Wire (Black or Smooth Side).

d. Wrap each connection with approved electrical tape and carefully stuff all of the connected wires into the Outlet Box.

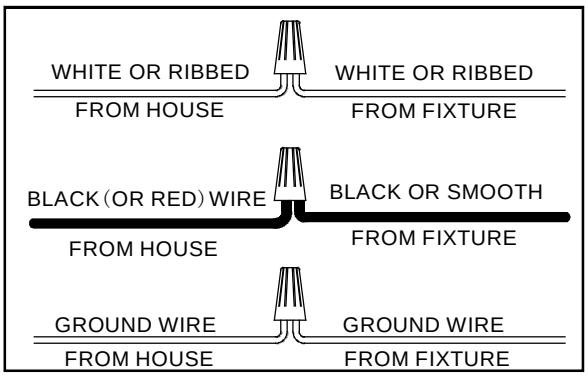

STEP 4:

a. Thread the short nipple end of the Stem into the Coupling underside of the Socket Assembly. Hand tighten until snug.

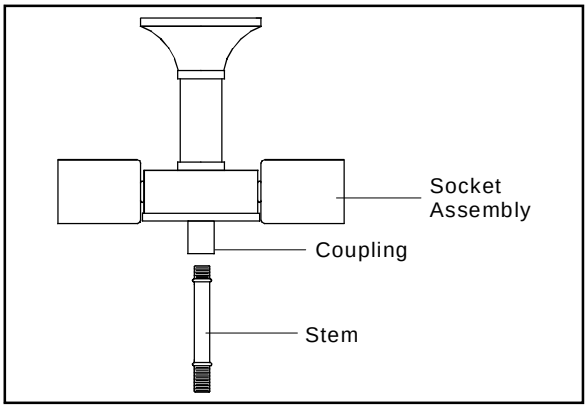

STEP 5 :

a. Lift the Shade upward and make the Studs through the hole on the ends of Side Arms. Secure the Shade by threading Lock Balls onto the Studs. Hand tighten until snug.

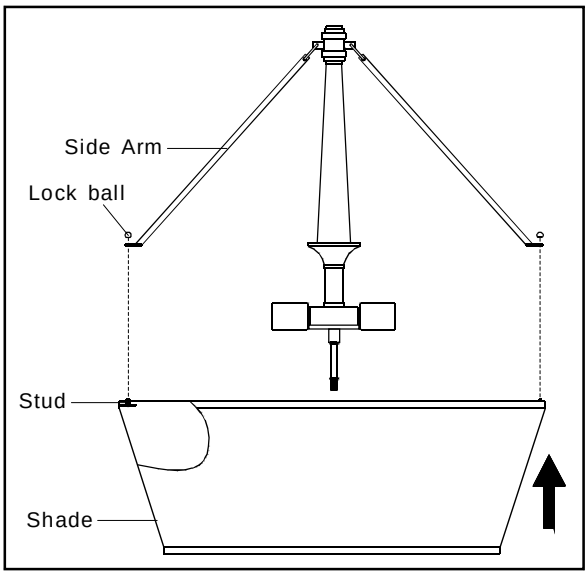

STEP 6:

a. Locate the Rubber Washer, the Glass Panel and the Rubber Washer over the end of the Stem in turn. Secure them with the Hex Nut and tighten gently until snug.
b. Thread the Finial onto the end of the Stem and hand tighten until snug.

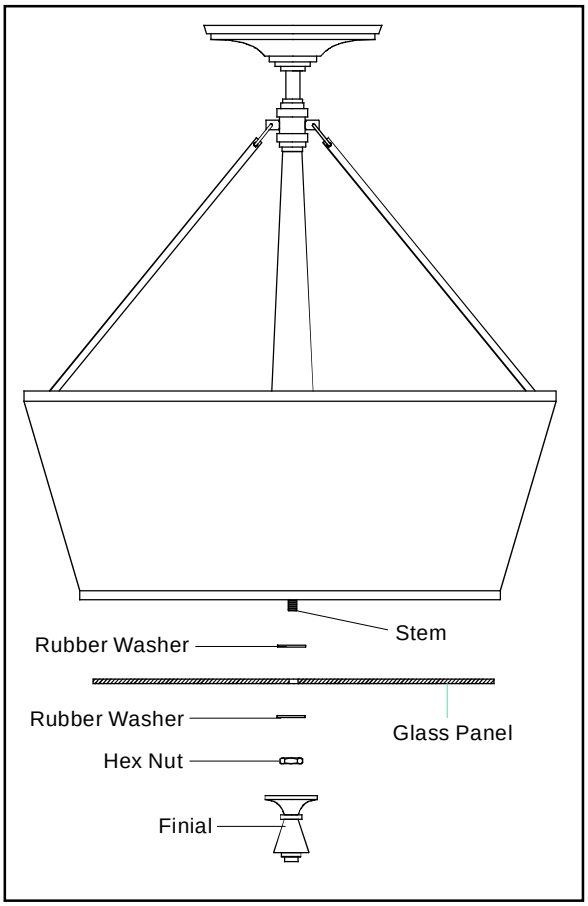

STEP 7 :

a. Install correct bulbs referring to fixture markings and/or labels for maximum wattage.

Your installation is completed now. Restore electricity. Retain this sheet for future reference.