TECHNICAL SPECIFICATIONS

Loch Rosette

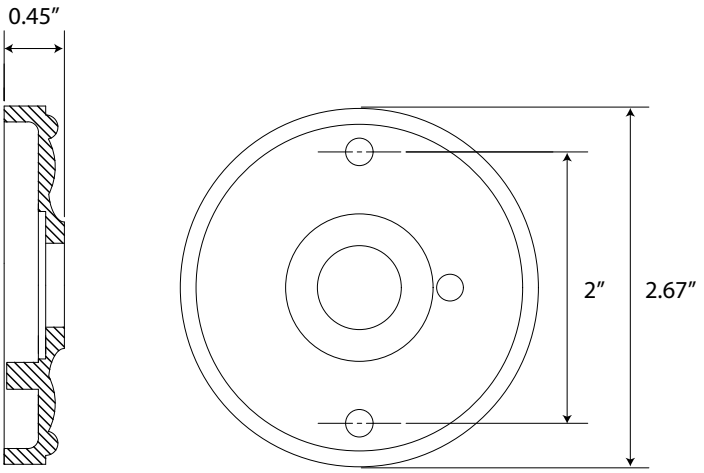

› Design code: LOC

› Material: Cast iron, zinc plated and powder coated

TECHNICAL SPECIFICATIONS

Cannon Lever

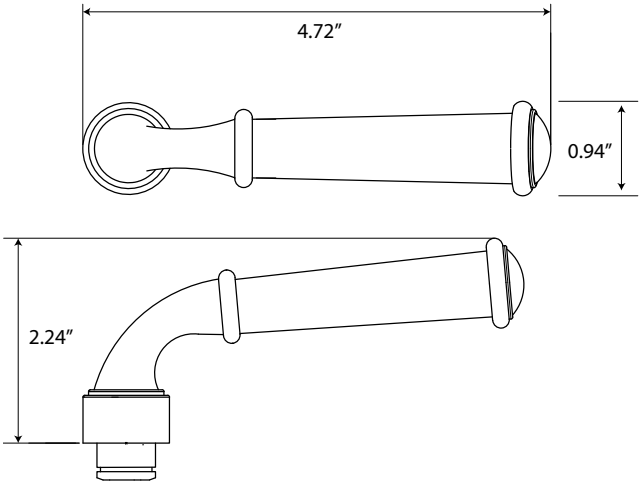

› Design code: CAN

› Material: Cast iron, zinc plated and powder coated

›Functions: Left or right handing



Cannon Lever on Loch Rosette