HINKLEY LIGHTING

design • illuminate • enjoy

assembly instructions

4631

Family: Brantley | Item No. 4631

start here

Drawing 1 - Strap Detail

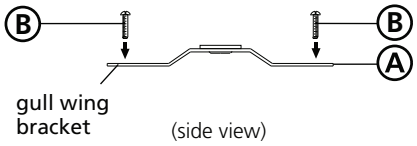

Drawing 2 - Fixture Mounting

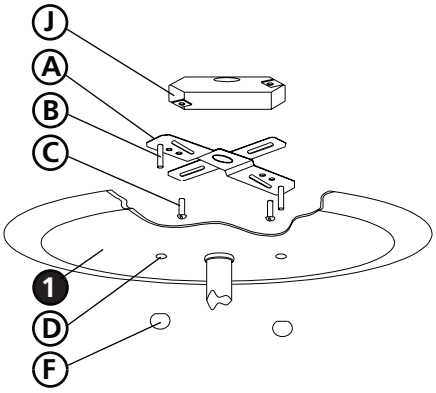

Drawing 3 - Glass Installation

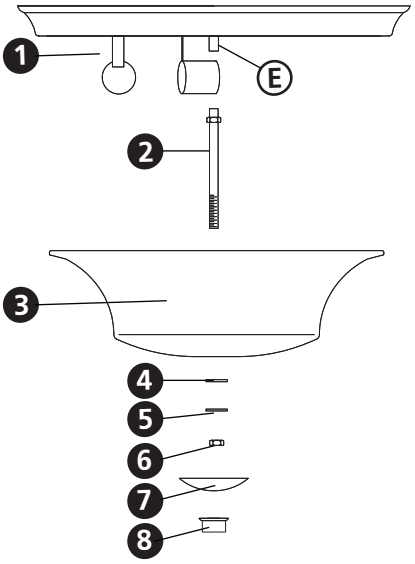

1

1. Find a clear area in which you can work.

2. Unpack fixture and glass from carton.

3. Carefully review instructions prior to assembly.

****** The construction of this fixture will be accomplished by first mounting the mounting strap to the junction box, making all necessary electrical connections, hanging the fixture from the ceiling, and then installing the glass.***

2

1. Prepare gem strap **(A)** for mounting by threading two screws **(B)** provided into back of gull wing bracket of gem strap **(A)** - see **Drawing 2**.

• Be sure the holes into which the screws are threaded match the spacing of holes **(D)** in the ceiling pan **(1)** - see **Drawings2 and 3**.

2. Mount gem strap **(A)** to junction box **(J)**, using the two 1" screws **(C)** provided.

SAFETY WARNING: READ WIRING AND GROUNDING INSTRUCTIONS (I.S. 18) AND ANY ADDITIONAL DIRECTIONS. TURN POWER SUPPLY OFF DURING INSTALLATION. IF NEW WIRING IS REQUIRED, CONSULT A QUALIFIED ELECTRICIAN OR LOCAL AUTHORITIES FOR CODE REQUIREMENTS.

3

Make electrical connections from supply wire to fixture lead wires. Refer to instruction sheet **(I.S. 18)** and follow all instructions to make all necessary wiring connections. Then refer back to this sheet to continue installation of this fixture.

4

1. Hang the fixture by slipping the holes **(D)** in the ceiling pan **(1)** over the screws **(B)** in the mounting strap **(A)** - see **Drawing 2**.

2. Thread on ball knobs **(F)** to secure fixture to the ceiling.

5

1. Prior to installing the glass, fixture can be lamped accordingly.

2. Thread center stem **(2)** into nipple **(E)** - see **Drawing 2**.

3. To install glass, slip glass **(3)** onto center stem **(2)** and hold in position.

4. Slip rubber washer **(4)** onto center stem **(2)** followed by metal washer **(5)** and hold in position.

5. Thread hex nut **(6)** onto center stem **(2)** and tighten up against glass **(3)**.
Note: Hand tighten only. Over tightening could cause glass damage.

6. Slip cap **(7)** and thread finial **(8)** onto center stem **(2)** and tighten.
Note: Hand tighten only. Over tightening could cause glass damage.

09.16.09

HINKLEY LIGHTING

design • illuminate • enjoy

I.S. 18 wiring | grounding instructions

SAFETY WARNING: READ WIRING AND GROUNDING INSTRUCTIONS (I.S. 18) AND ANY ADDITIONAL DIRECTIONS. TURN POWER SUPPLY OFF DURING INSTALLATION. IF NEW WIRING IS REQUIRED, CONSULT A QUALIFIED ELECTRICIAN OR LOCAL AUTHORITIES FOR CODE REQUIREMENTS.

Drawing 1 - Flush Mount

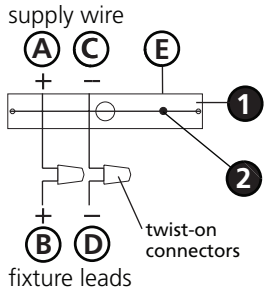

Drawing 2 - Chain Hung

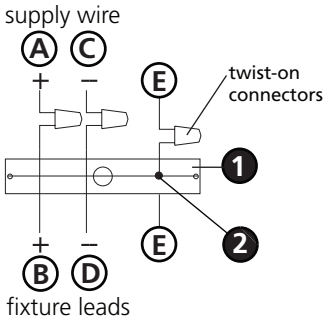

Drawing 3 - Post-Mount

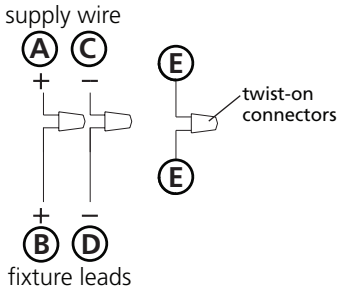

wiring instructions

Indoor Fixtures

1. Connect positive supply wire **(A)** (typically black or the smooth, unmarked side of the two-conductor cord) to positive fixture lead **(B)** with appropriately sized twist on connector - see **Drawings 1 or 2**.

2. Connect negative supply wire **(C)** (typically white or the ribbed, marked side of the two-conductor cord) to negative fixture lead **(D)**.

3. Please refer to the **grounding instructions** below to complete all electrical connections.

Outdoor Fixtures

1. Connect positive supply wire **(A)** (typically black or the smooth unmarked side of the two-conductor cord) to positive fixture lead **(B)** with appropriately sized twist on connector - see **Drawings 2 or 3**.

2. Connect negative supply wire **(C)** (typically white or the ribbed, marked side of the two-conductor cord) to negative fixture lead **(D)**.

3. Cover open end of connectors with silicone sealant to form a watertight seal.

• If installing a wall mount fixture, use caulk to seal gaps between the fixture mounting plate (backplate) and the wall. This will help prevent water from entering the outlet box. If the wall surface is lap siding, use caulk and a fixture mounting platform specially.

4. Please refer to the **grounding instructions** below to complete all electrical connections.

grounding instructions

Flush Mount Fixtures
For positive grounding in a 3-wire electrical system, fasten the fixture ground wire **(E)** (typically copper or green plastic coated) to the fixture mounting strap **(1)** with the ground screw **(2)** - see **Drawing 1**.
Note: On straps for screw supported fixtures, first install the two mounting screws in strap. Any remaining tapped hole may be used for the ground screw.

Chain Hung Fixtures
Loop fixture ground wire **(E)** (typically copper or green plastic coated) under the head of the ground screw **(2)** on fixture mounting strap **(1)** and connect to the loose end of the fixture ground wire directly to the ground wire of the building system with appropriately sized twist-on connectors - see **Drawing 2**.

Post-Mount Fixtures
Connect fixture ground wire **(E)** (typically copper or green plastic coated) to power supply ground with appropriately sized twist-on connector inside post. Cover open end of connector with silicone sealant to form a watertight seal - see **Drawing 3**.