HINKLEY
LIGHTING

assembly instructions

Item no. 1725 / 1726

Drawing 1 - Strap Detail

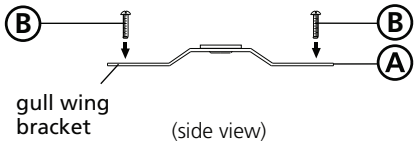

Drawing 2 - Fixture Mounting

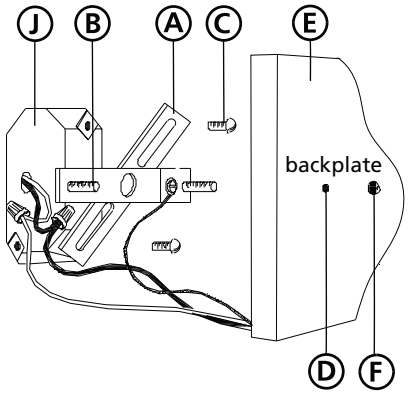

Drawing 3 - Fixture Assembly

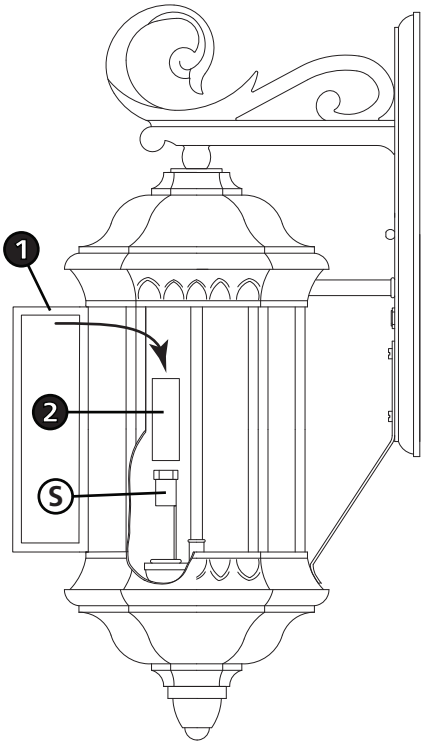

start here

REVISION 1

1

1. Find a clear area in which you can work.

2. Unpack fixture and glass from carton.

3. Carefully review instructions prior to assembly.

****** The construction of this fixture will be accomplished by first mounting the mounting strap to the junction box, making all necessary electrical connections, and then mounting the fixture to the wall.***

2

1. Prepare mounting strap **(A)** by threading the two 1 1/4" long mounting screws **(B)** into the back of the gull wing bracket - see **Drawing 1**.

• Be sure the holes into which the screws are threaded match the spacing of holes **(D)** in the back plate **(E)** - see **Drawings 1 and 2**.

3. Attach mounting strap **(A)** to junction box **(J)** using two 1" screws **(C)** not provided.

SAFETY WARNING: READ WIRING AND GROUNDING INSTRUCTIONS (I.S. 18) AND ANY ADDITIONAL DIRECTIONS. TURN POWER SUPPLY OFF DURING INSTALLATION. IF NEW WIRING IS REQUIRED, CONSULT A QUALIFIED ELECTRICIAN OR LOCAL AUTHORITIES FOR CODE REQUIREMENTS.

3

Make electrical connections from supply wire to fixture lead wires. Refer to instruction sheet **(I.S. 18)** and follow all instructions to make all necessary wiring connections. Then refer back to this sheet to continue installatio of this fixture.

4

1. Mount the fixture by slipping the holes **(D)** in the backplate **(E)** over the screws **(B)** in mounting strap **(A)** - see **Drawing 2.**

2. Thread on ball knobs **(F)** to secure fixture to the wall.

1. After installation is completed, to finish assemlby of this fixture, open door **(1)** of fixture - see **Drawing 2**.

2. Next, slide candle sleeve **(2)** over socket **(S)**. Repeat for remaining sockets.

3. Fixture can now be lamped accordingly.

3.19.09

HINKLEY
LIGHTING

I.S. 18 wiring | grounding instructions

SAFETY WARNING: READ WIRING AND GROUNDING INSTRUCTIONS (I.S. 18) AND ANY ADDITIONAL DIRECTIONS. TURN POWER SUPPLY OFF DURING INSTALLATION. IF NEW WIRING IS REQUIRED, CONSULT A QUALIFIED ELECTRICIAN OR LOCAL AUTHORITIES FOR CODE REQUIREMENTS.

Drawing 1 - Flush Mount

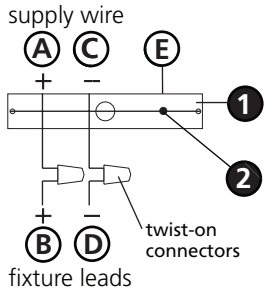

Drawing 2 - Chain Hung

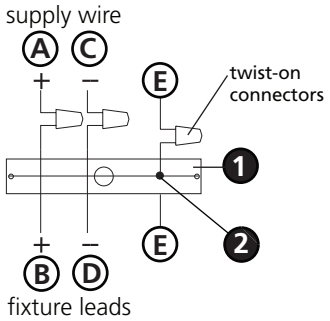

Drawing 3 - Post-Mount

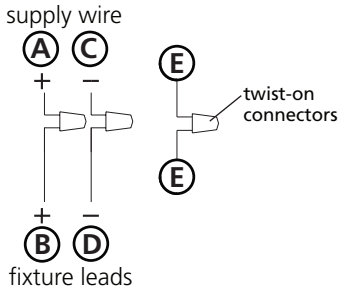

wiring instructions

Indoor Fixtures

1. Connect positive supply wire **(A)** (typically black or the smooth, unmarked side of the two-conductor cord) to positive fixture lead **(B)** with appropriately sized twist on connector - see **Drawings 1 or 2**.

2. Connect negative supply wire **(C)** (typically white or the ribbed, marked side of the two-conductor cord) to negative fixture lead **(D)**.

3. Please refer to the **grounding instructions** below to complete all electrical connections.

Outdoor Fixtures

1. Connect positive supply wire **(A)** (typically black or the smooth unmarked side of the two-conductor cord) to positive fixture lead **(B)** with appropriately sized twist on connector - see **Drawings 2 or 3**.

2. Connect negative supply wire **(C)** (typically white or the ribbed, marked side of the two-conductor cord) to negative fixture lead **(D)**.

3. Cover open end of connectors with silicone sealant to form a watertight seal.

• If installing a wall mount fixture, use caulk to seal gaps between the fixture mounting plate (backplate) and the wall. This will help prevent water from entering the outlet box. If the wall surface is lap siding, use caulk and a fixture mounting platform specially.

4. Please refer to the **grounding instructions** below to complete all electrical connections.

grounding instructions

Flush Mount Fixtures
For positive grounding in a 3-wire electrical system, fasten the fixture ground wire **(E)** (typically copper or green plastic coated) to the fixture mounting strap **(1)** with the ground screw **(2)** - see **Drawing 1**.
Note: On straps for screw supported fixtures, first install the two mounting screws in strap. Any remaining tapped hole may be used for the ground screw.

Chain Hung Fixtures
Loop fixture ground wire **(E)** (typically copper or green plastic coated) under the head of the ground screw **(2)** on fixture mounting strap **(1)** and connect to the loose end of the fixture ground wire directly to the ground wire of the building system with appropriately sized twist-on connectors - see **Drawing 2**.

Post-Mount Fixtures
Connect fixture ground wire **(E)** (typically copper or green plastic coated) to power supply ground with appropriately sized twist-on connector inside post. Cover open end of connector with silicone sealant to form a watertight seal - see **Drawing 3**.

I.S.200 caulking instructions

start here

1. After securing fixture to the wall it is recommended that the gap between the wall and fixture backplate be sealed with any good quality waterproof caulk or silicone sealant. (NOT INCLUDED) See Drawing 1.

Drawing 1

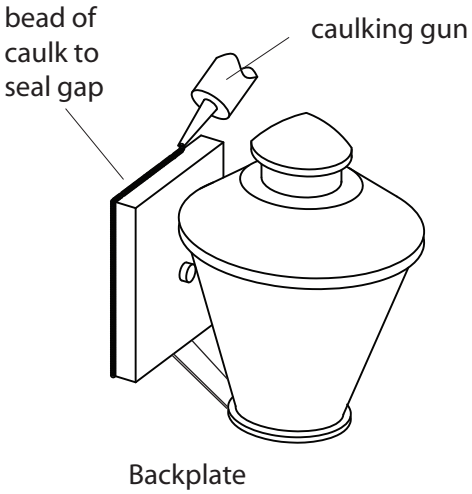

1. After securing fixture in place it is recommended that the gap between the mounting top and fixture base be sealed with any good quality waterproof caulk or silicone sealant. (NOT INCLUDED). It is also recommended that a small bead of caulk or sealant be put under the ball knobs used to mount fixture. See Drawing 2.

Drawing 2

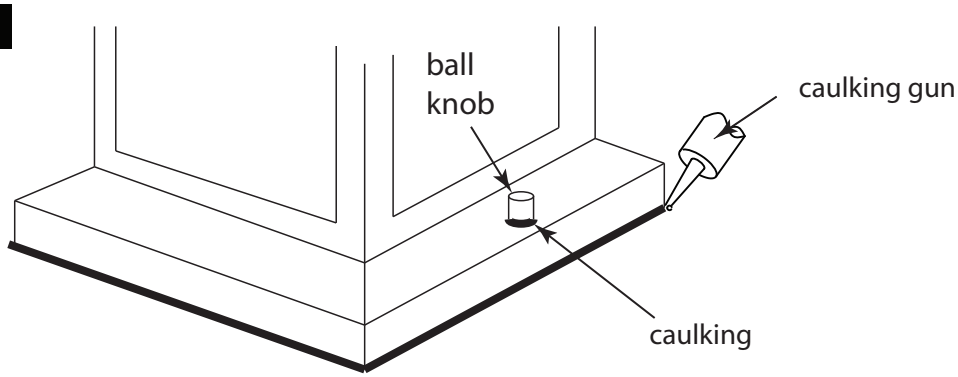

HINKLEY LIGHTING 33000 Pin Oak Parkway Avon Lake, OH 44012 800.446.5539 / 440.653.5500 hinkleylighting.com

HINKLEY
LIGHTING

I.S.101 hanging instructions

Drawing 1 - Safety Cable

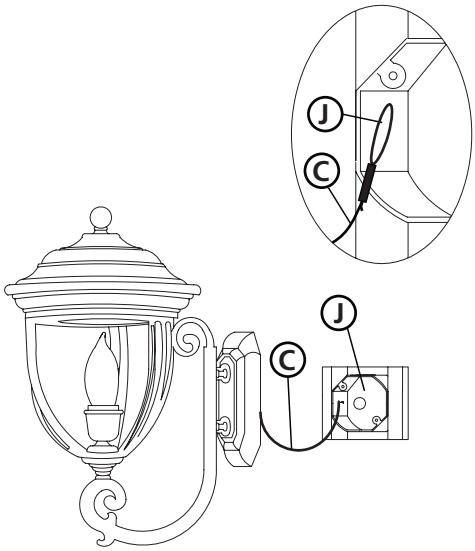

1

start here

- This instruction sheet is intended for safety cable installation only. The luminare on this instruction sheet is only an example and will differ from what you have purchased.

SAFETY WARNING: TO AVOID ELECTRICAL SHOCK THIS INSTRUCTION SHEET IS FOR THE SOLE PURPOSE OF SAFETY CABLE INSTALLATION AND IS NOT TO BE USED TO MAKE ANY ELECTRICAL CONNECTIONS.

1. Due to the weight of this fixture, it has a safety cable (C) is attached to the inside of the backplate.

2. This safety cable (C) is to be attached to the joist that supports the junction box (J) the fixture will be installed on.

3. It is up to the the customer to determine and purchase the hardware necessary to attach the safety cable.

6.11.08