HINKLEY LIGHTING

design • illuminate • enjoy

assembly instructions

1380

Item No. 1380

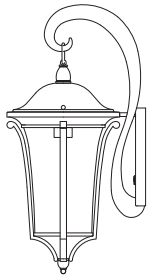

start here

Drawing 1 - Fixture Mounting

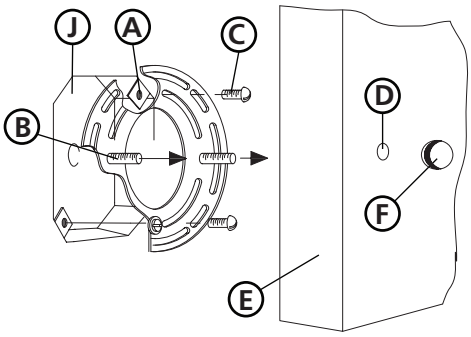

1

1. Find a clear area in which you can work.

2. Unpack fixture and glass from carton.

3. Carefully review instructions prior to assembly.

****** The construction of this fixture will be accomplished by first mounting the mounting strap to the junction box, making all necessary electrical connections, mounting the fixture to the wall and then assembling the main body of the fixture.***

Drawing 2 - Fixture Assembly

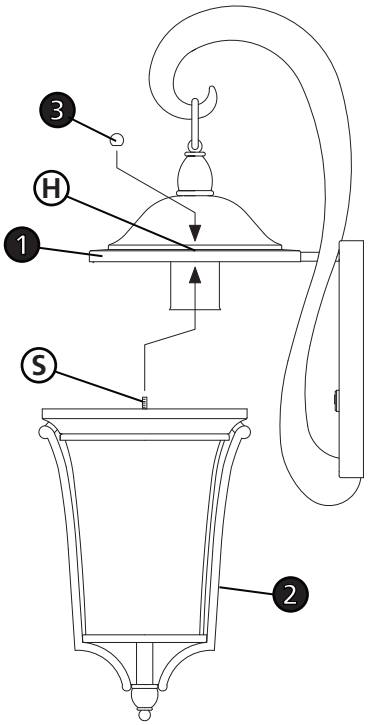

2

1. Prepare mounting strap **(A)** by threading the two long mounting screws **(B)** into the back of the universal strap - see **Drawing 1**.

• Be sure the holes into which the screws are threaded match the spacing of holes **(D)** in the back plate **(E)**.

2. Attach mounting strap **(A)** to junction box **(J)** using two screws **(C)** provided.

SAFETY WARNING: READ WIRING AND GROUNDING INSTRUCTIONS (I.S. 18) AND ANY ADDITIONAL DIRECTIONS. TURN POWER SUPPLY OFF DURING INSTALLATION. IF NEW WIRING IS REQUIRED, CONSULT A QUALIFIED ELECTRICIAN OR LOCAL AUTHORITIES FOR CODE REQUIREMENTS.

3

Make electrical connections from supply wire to fixture lead wires. Refer to instruction sheet **(I.S. 18)** and follow all instructions to make all necessary wiring connections. Then refer back to this sheet to continue installation of this fixture.

4

1. To mount fixture, slip the two mounting screws **(B)** through the two mounting holes **(D)** in the backplate **(E)** - see **Drawing 1**.

2. While holding fixture in place, thread the two ball knobs **(F)** on to the end of the mounting screws **(B)**, and tighten.

5

1. Fixture can be lamped accordingly prior to cage and glass assemlby **(2)** is attached to fixture - see **Drawing 2.**

2. To complete assembly of fixture slip studs **(S)** of cage and glass assembly **(2)** through holes **(H)** in fixture roof **(1)**.

3. Thread ball knob **(3)** onto end of stud **(S)** and tighten.

01.01.13

HINKLEY LIGHTING

design • illuminate • enjoy

I.S. 18 wiring | grounding instructions

SAFETY WARNING: READ WIRING AND GROUNDING INSTRUCTIONS (I.S. 18) AND ANY ADDITIONAL DIRECTIONS. TURN POWER SUPPLY OFF DURING INSTALLATION. IF NEW WIRING IS REQUIRED, CONSULT A QUALIFIED ELECTRICIAN OR LOCAL AUTHORITIES FOR CODE REQUIREMENTS.

Drawing 1 - Flush Mount

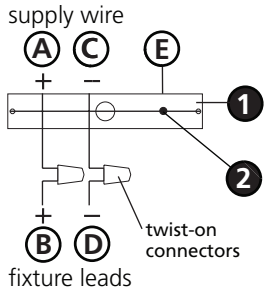

Drawing 2 - Chain Hung

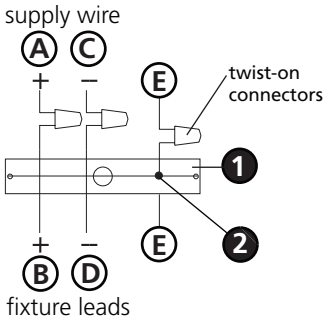

Drawing 3 - Post-Mount

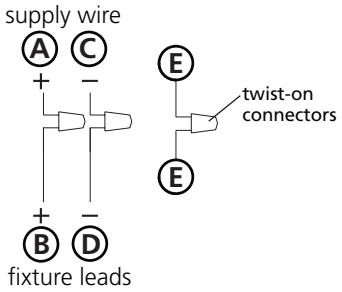

wiring instructions

Indoor Fixtures

1. Connect positive supply wire **(A)** (typically black or the smooth, unmarked side of the two-conductor cord) to positive fixture lead **(B)** with appropriately sized twist on connector - see **Drawings 1 or 2**.

2. Connect negative supply wire **(C)** (typically white or the ribbed, marked side of the two-conductor cord) to negative fixture lead **(D)**.

3. Please refer to the **grounding instructions** below to complete all electrical connections.

Outdoor Fixtures

1. Connect positive supply wire **(A)** (typically black or the smooth unmarked side of the two-conductor cord) to positive fixture lead **(B)** with appropriately sized twist on connector - see **Drawings 2 or 3**.

2. Connect negative supply wire **(C)** (typically white or the ribbed, marked side of the two-conductor cord) to negative fixture lead **(D)**.

3. Cover open end of connectors with silicone sealant to form a watertight seal.

• If installing a wall mount fixture, use caulk to seal gaps between the fixture mounting plate (backplate) and the wall. This will help prevent water from entering the outlet box. If the wall surface is lap siding, use caulk and a fixture mounting platform specially.

4. Please refer to the **grounding instructions** below to complete all electrical connections.

grounding instructions

Flush Mount Fixtures
For positive grounding in a 3-wire electrical system, fasten the fixture ground wire **(E)** (typically copper or green plastic coated) to the fixture mounting strap **(1)** with the ground screw **(2)** - see **Drawing 1**.
Note: On straps for screw supported fixtures, first install the two mounting screws in strap. Any remaining tapped hole may be used for the ground screw.

Chain Hung Fixtures
Loop fixture ground wire **(E)** (typically copper or green plastic coated) under the head of the ground screw **(2)** on fixture mounting strap **(1)** and connect to the loose end of the fixture ground wire directly to the ground wire of the building system with appropriately sized twist-on connectors - see **Drawing 2**.

Post-Mount Fixtures
Connect fixture ground wire **(E)** (typically copper or green plastic coated) to power supply ground with appropriately sized twist-on connector inside post. Cover open end of connector with silicone sealant to form a watertight seal - see **Drawing 3**.

HINKLEY LIGHTING

design • illuminate • enjoy

I.S.200 caulking instructions

start here

1. After securing fixture to the wall it is recommended that the gap between the wall and fixture backplate be sealed with any good quality waterproof caulk or silicone sealant. (NOT INCLUDED) See Drawing 1.

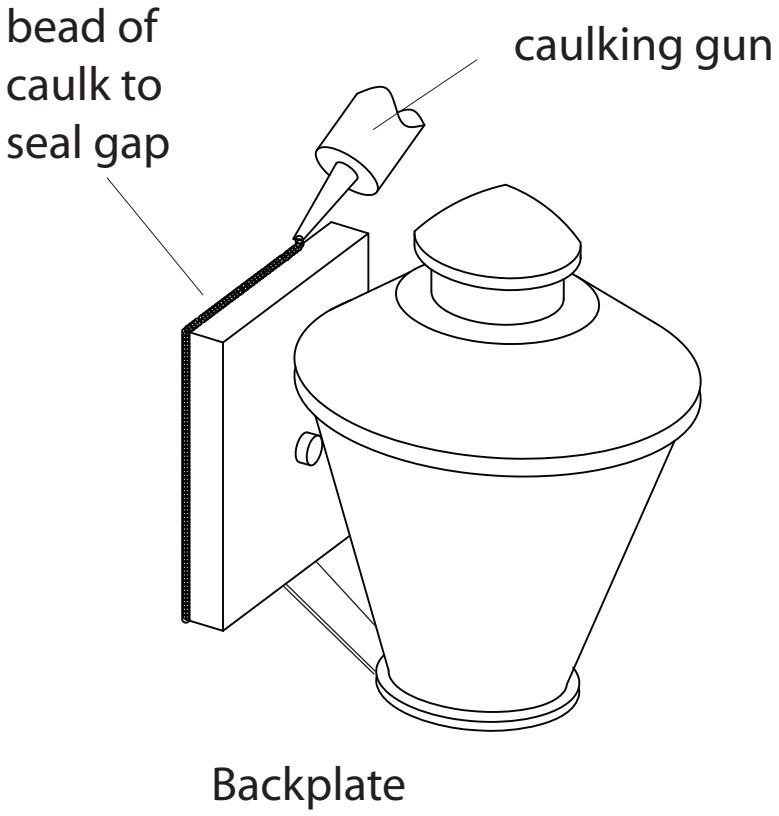

Drawing 1

8.12.10