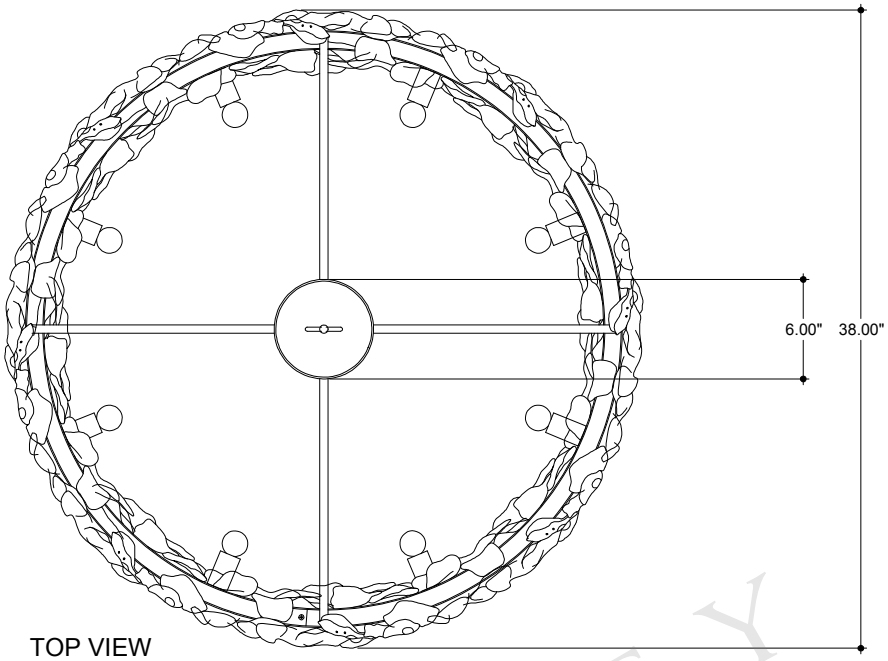

TOP VIEW

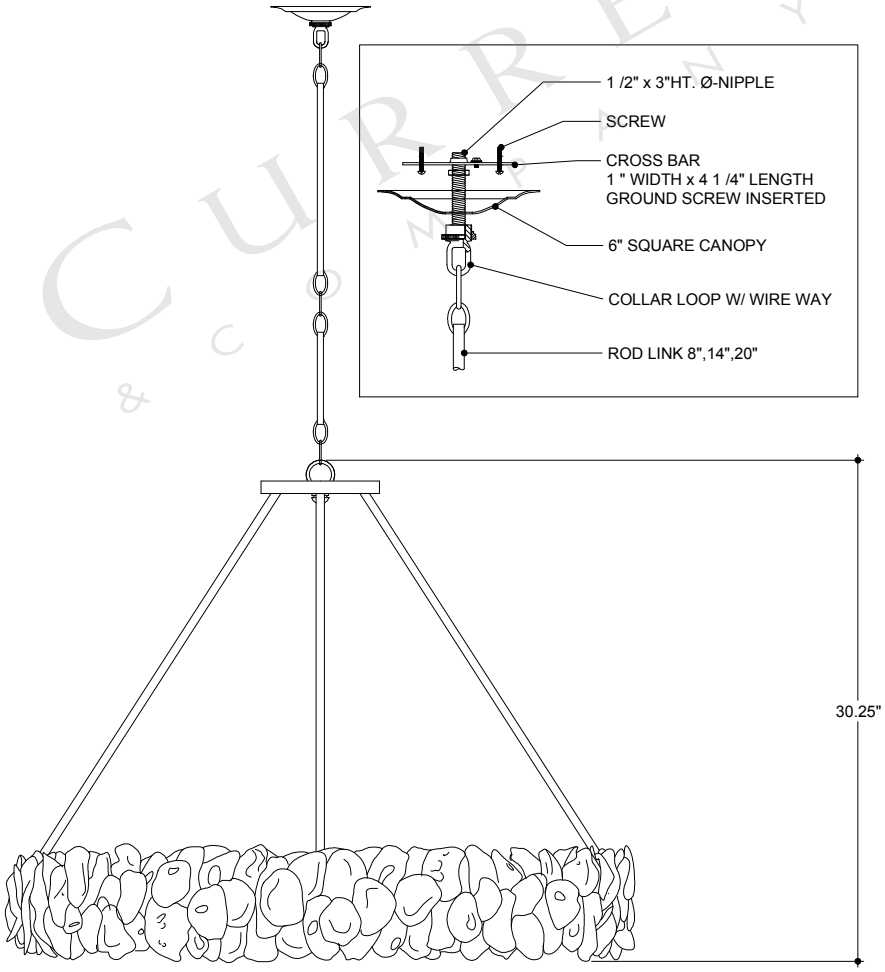

FRONT VIEW

9672

ALL WORK © 2015 CURREY & COMPANY