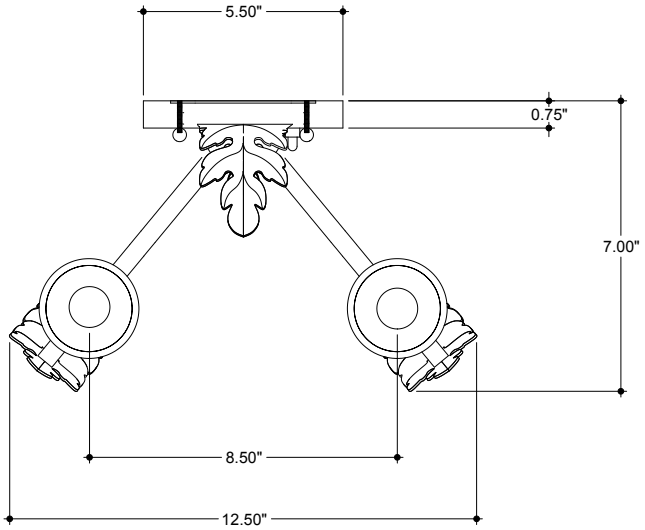

TOP VIEW

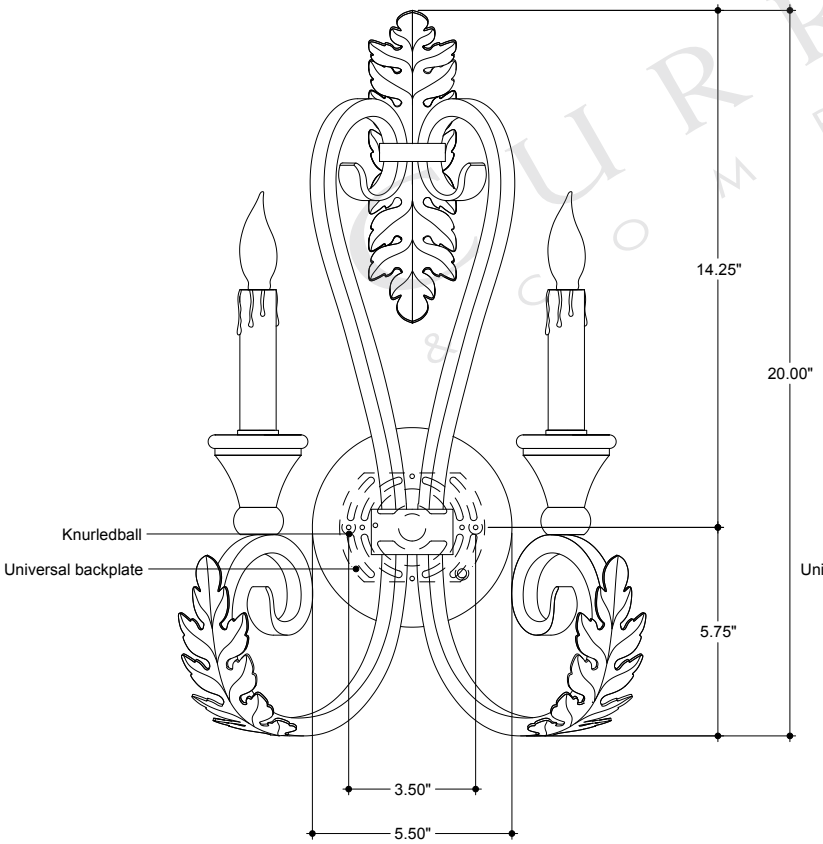

FRONT VIEW

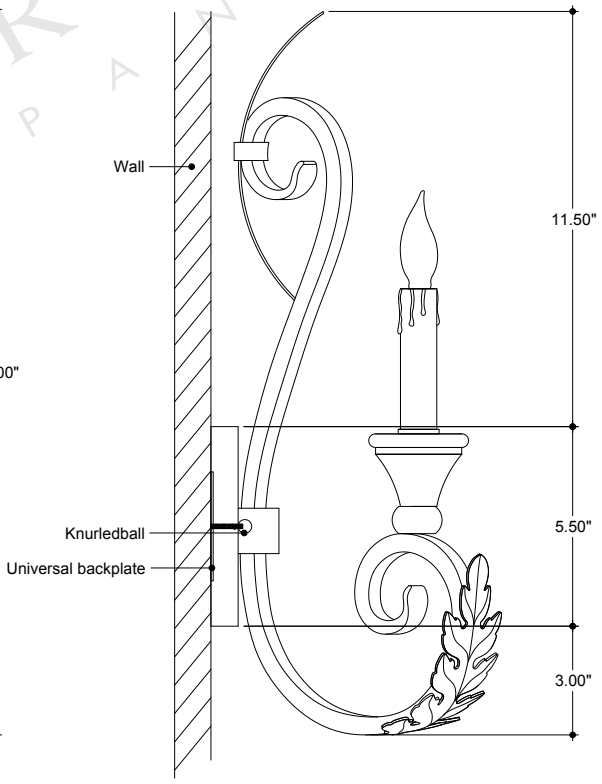

SIDE VIEW

CURREY & COMPANY

5350

ALL WORK © 2015 CURREY & COMPANY