Strom Plumbing
BY
Sign of the Crab

Ph: (916) 638-2722 / Fax: (916) 638-2725

Installation Information

Item #P1092
Exposed Shower Set with Handheld Shower, 7” Centers

PLEASE NOTE BEFORE INSTALLATION: To insure proper installation, you must establish the installation location and the positioning of the valve unit and shower riser, taking into consideration the personal preferences of the user’s height, the ceiling height and any applicable local plumbing codes. Warranted only if installed by a qualified licensed plumber.

1. **Shut off the water supply before installation.**
2. **Rough-in ½” Male IPS with ½” of threads past the finished wall at 7” centers.**
3. **Thread on the straight wall mount couplers to the ½” nipples extending out from finished wall, use Teflon paste or tape.**
4. **Connect the main valve body to the wall mount couplers.**
5. **Insert the riser into the valve body and tighten the compression nut to seal the riser connection.**
6. **Attach the wall bracket escutcheon to the wall at desired height. *Wall support may need to be cut to length, cut non-threaded end only*. Secure to riser with the c-clamp provided.**
7. **Attach shower head to the shower arm using Teflon paste or tape.**
8. **Install handheld bracket onto wall.**
9. **Thread on the vacuum breaker provided onto the outlet at the bottom of the faucet body.**
10. **Attach the nut end of the hose to the vacuum breaker and the tapered end onto the handheld unit.**

Parts Included:

(1) Diverter Valve body, 7”
(1) 2” Wall Mount Couplers, pr.
(1) 36” Hook Riser
(1) Handshower & Hose
(1) Vacuum Breaker
(1) Riser Bracket for Handshower
(1) 12” Wall Support
(1) 8” Shower Head

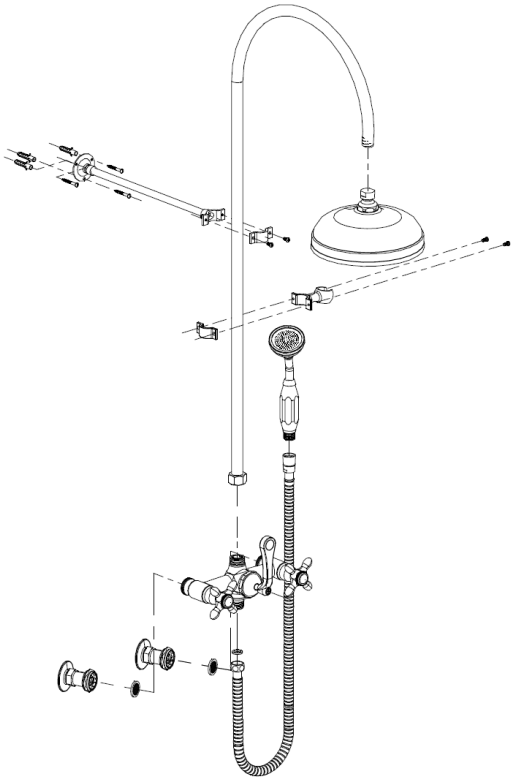

ITEM #	Extension from wall to Spout or Head	Body C to C	Total height from Inlet	Bottom of Head or spout to Inlet
P1092	17"	7"	38"	25"

NOTE:
THIS UNIT IS NOT WARRANTED FOR OUTDOOR USE.