QUOIZEL
6 CORPORATE PARKWAY
GOOSE CREEK, SC. 29445
www. quoizel. com

Quoizel, Inc.
6 Corporate Parkway
Goose Creek, SC
29445

Customer Service
Phone 631.273.2700
Fax 631.231.7102
www.quoizel.com

Assembly Instruction Sheet #IS-UPSP8701IS
For Style UPSP8701IS

Tools Required: Flathead screwdriver, Phillips screwdriver, pliers, wire cutters, wire strippers, electrical tape, safety glasses.

Bulb Recommended: (1) Medium Base 75W Maximum

Estimated Assembly Time: 20-30 minutes

Preparation: Identify and inspect all parts before beginning installation. Check package content list and diagrams below to be sure all parts are present. If any parts are missing or damaged, do not attempt to assemble, install, or operate the fixture. Contact customer service for replacement parts.

Warnings and Cautions

Turn off electricity at circuit breaker or main fuse box before installation. Consult a licensed electrician if in doubt.

These instructions are provided for your safety. It is very important you read them completely before installing the fixture. We strongly recommend that a licensed, professional electrician perform the installation.

Disconnect fixture from power source before replacing bulbs. Make sure bulbs are given sufficient time to cool before removal. Do not subject glass parts to any shock while in operation or shattering may result.

Package Contents

Part	Description	Quantity
A	Crossbar	1 pc.
B	Mounting Screw	2 pcs.
C	Lock Washer	2 pcs.
D	Hex Nut	2 pcs.
E	Mounting Ball	2 pcs.
F	Fixture Body	1 pc.
G	Socket Collar	1 pc.
H	Shade	1 pc.
I	Diffuser	1 pc.

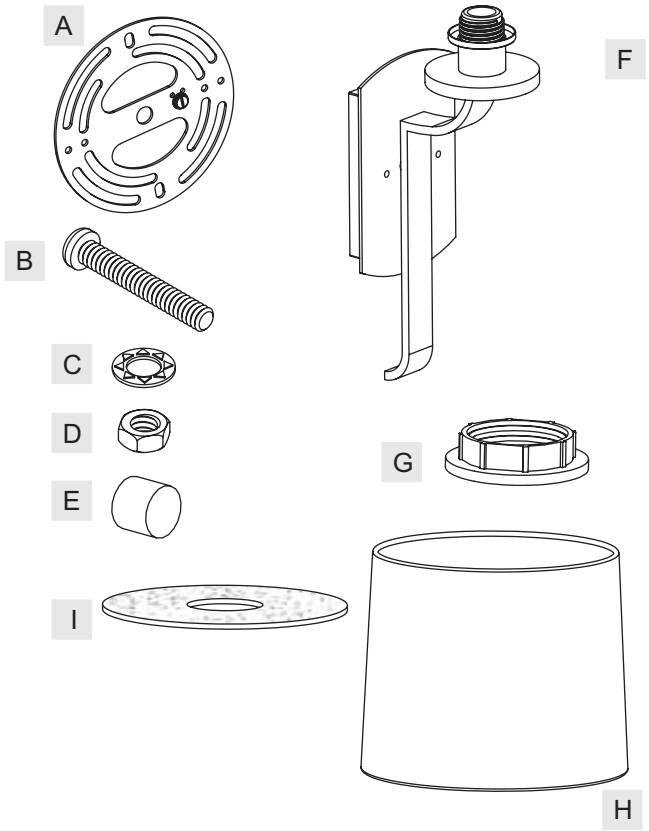

Thank you for purchasing a Quoizel product.
Need assistance with parts or assembly? Call Quoizel customer service at 1-631-273-2700
or visit us on-line at www.quoizel.com

c 2011 Quoizel Inc.

November2011

UPSP8710IS
FINISH: IMPERIAL SILVER

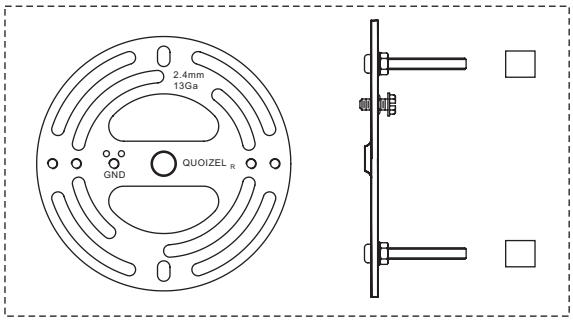

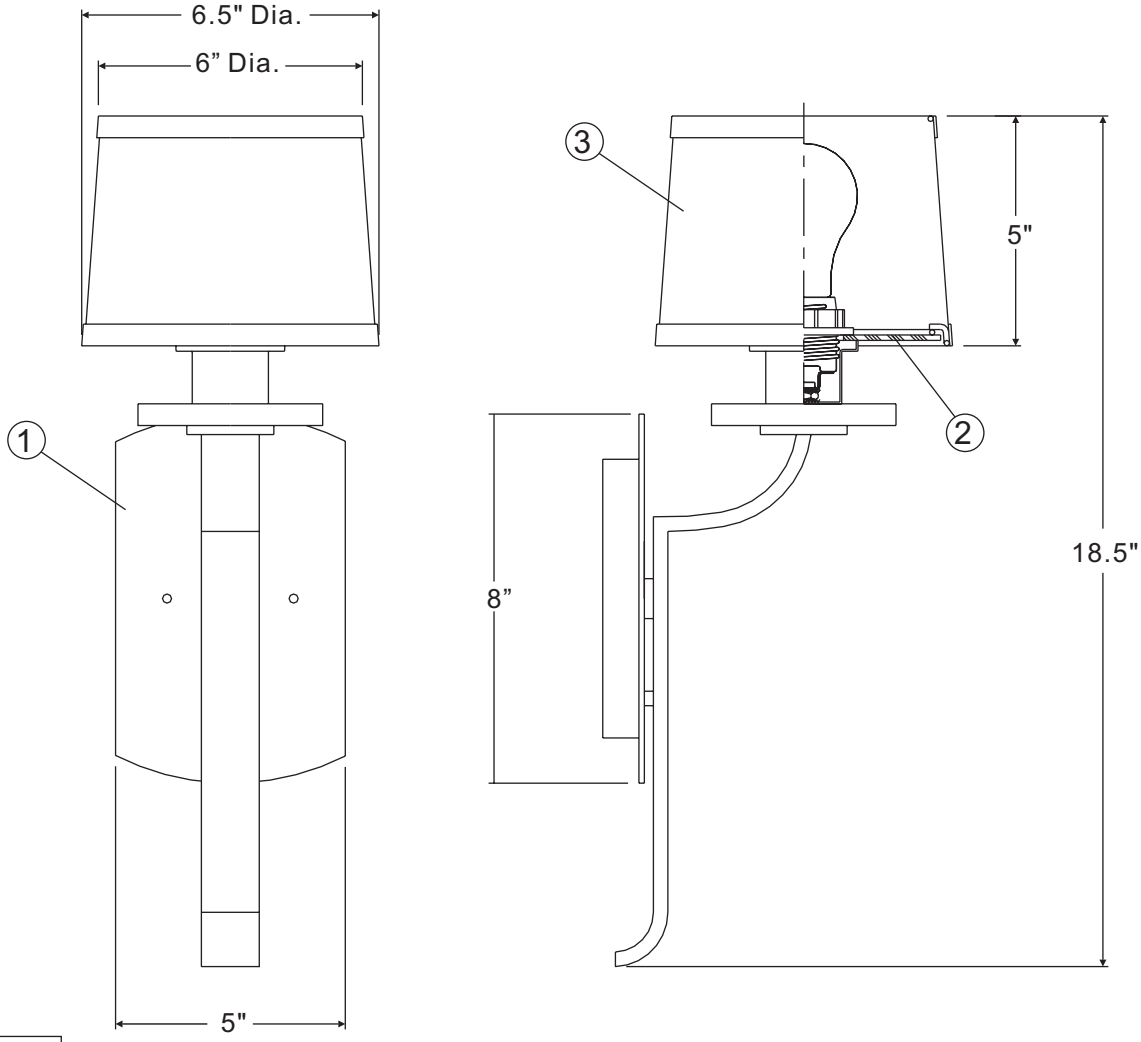

(1)75W A19
Medium Base Bulb
(Not Supplied)

NOTE: ALL DIMENSIONS ARE ROUNDED UP TO THE NEAREST 1/2″

NO.	PART NUMBER	REPLACEMENT PART DESCRIPTION	REQ.
1	18701ISUPSP	BASE UPSP8701IS	1
2	G2952DI	DIFFUSER SANDBLASTED ONE SIDE	1
3	S1351MI	SHADE MILANO 6" X 6.5" X 5"	1

QUOIZEL
6 CORPORATE PARKWAY
GOOSE CREEK, SC. 29445
www. quoizel. com

Assembly Instruction Sheet #IS-UPSP8701IS
For Style UPSP8701IS

STEP 1 – Attach Mounting Screws, Lock Washers and Hex Nuts to Crossbar

A. Line up a set of holes on the Crossbar (A) and Holes on the Backplate of the Fixture Body (F).
B. Thread Mounting Screws (B) into the holes on the Crossbar (A), pass Lock Washers (C) and thread Hex Nut (D) onto the Mounting Screws (B). Hand tighten until snug.

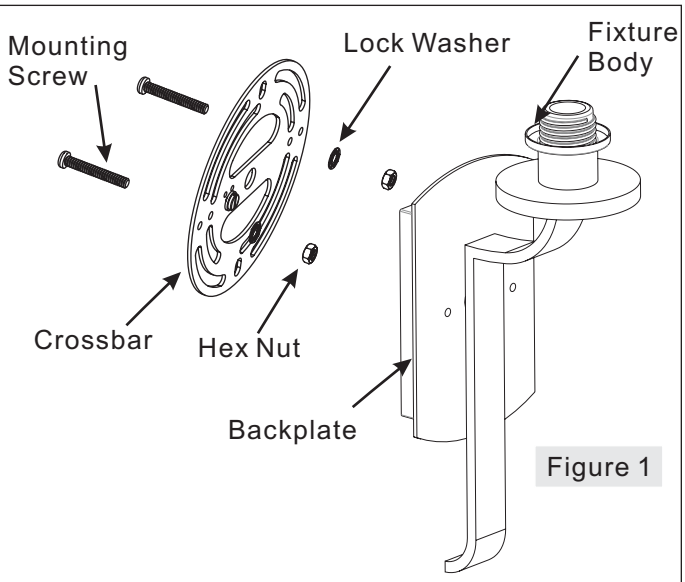

Figure 1

STEP 2 – Attach Crossbar to Outlet Box

A. Attach the Crossbar (A) to Outlet Box and secure by threading Outlet Box Screws (not supplied) into the Mounting Holes on the Outlet Box. Tighten until snug.

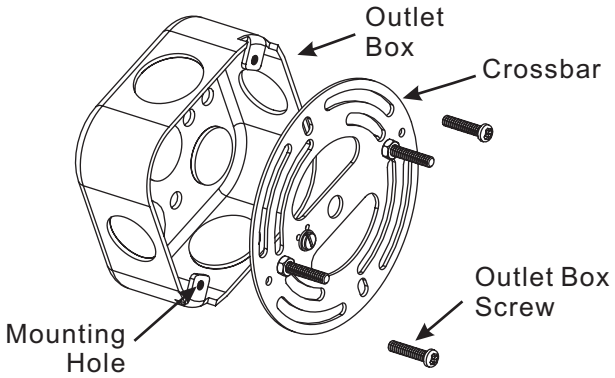

Figure 2

Thank you for purchasing a Quoizel product.
Need assistance with parts or assembly? Call Quoizel customer service at 1-631-273-2700
or visit us on-line at www.quoizel.com

c 2011 Quoizel Inc.
November2011

QUOIZEL
6 CORPORATE PARKWAY
GOOSE CREEK, SC. 29445
www. quoizel. com

Assembly Instruction Sheet #IS-UPSP8701IS
For Style UPSP8701IS

STEP 3 – Make Wire Connections

A. Use standard wire connectors to make all wire connections. (Connectors are not included with fixture.) Strip and prepare wire ends according to instructions supplied with connectors.
B. Connect White Supply Wire from the Outlet Box to White Wire from fixture.
C. Connect Black (or Red) Supply Wire from the Outlet Box to Black Wire from fixture.
D. Connect Ground Wire from the Outlet Box to Ground Wire from fixture.
E. Twist connectors until wires are tightly joined together.
F. Wrap each connection with approved electrical tape and carefully stuff all the connected wires into the Outlet Box.

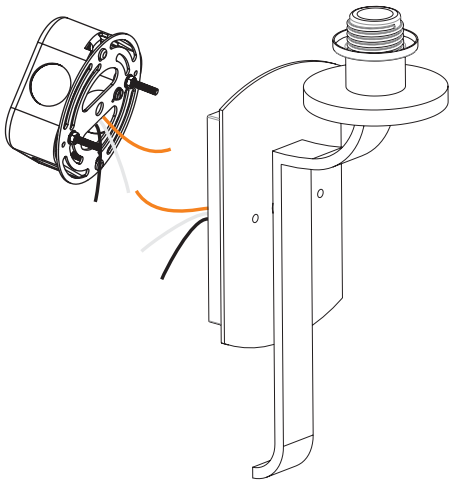

Figure 3

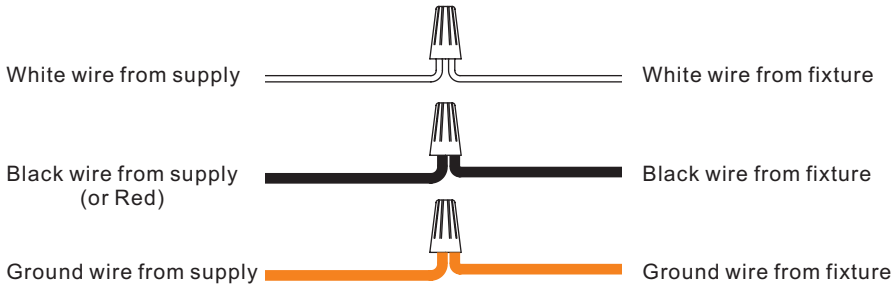

Figure 4

STEP 4 – Attach Fixture Body to Mounting Screw

A. Place the Backplate of the Fixture Body (F) over the Mounting Screws (B) and secure with Mounting Balls (E). Hand tighten until snug.

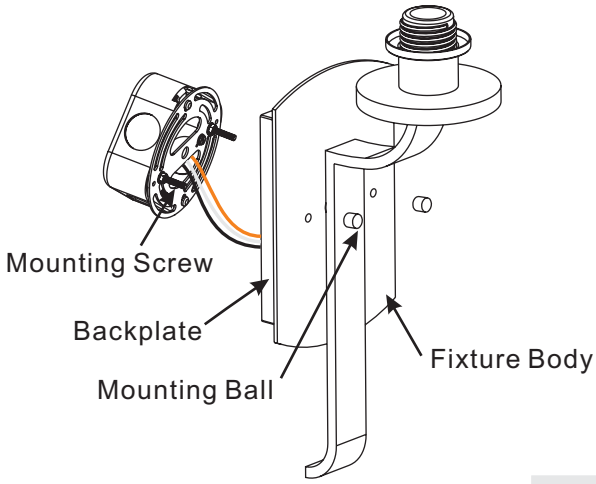

Figure 5

Thank you for purchasing a Quoizel product.
Need assistance with parts or assembly? Call Quoizel customer service at 1-631-273-2700
or visit us on-line at www.quoizel.com

c 2011 Quoizel Inc.

November2011

QUOIZEL
6 CORPORATE PARKWAY
GOOSE CREEK, SC. 29445
www. quoizel. com

Assembly Instruction Sheet #IS-UPSP8701IS
For Style UPSP8701IS

STEP 5 – Attach Shade to Fixture Body

A. Place the Diffuser (I) over the Socket with the Sandblast surface upward. Thread the Socket Collar (G) onto the Socket to secure the Diffuser (I). Hand tighten until snug.
B. Place the shade (H) over the Diffuser (I) properly.

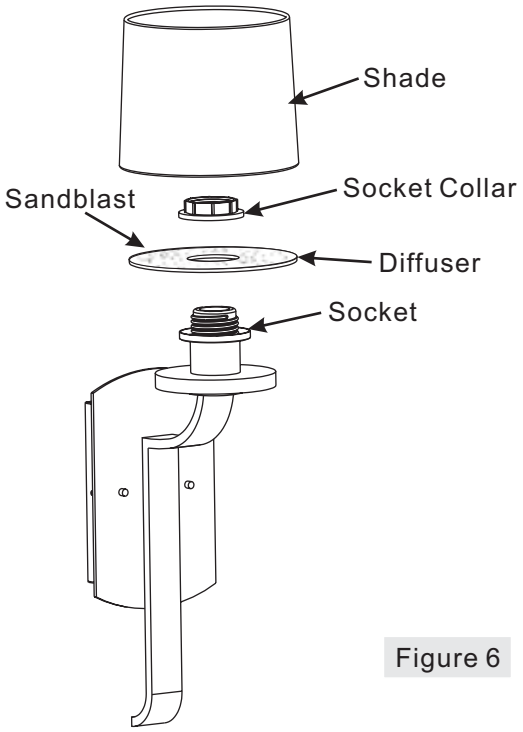

Figure 6

STEP 6 – Install Bulb

A. This fixture uses standard bulbs with a standard screw base. Maximum 75 watts.
B. Insert bulb and screw properly into place.

Your fixture wall lamp is now assembled and ready to use. Enjoy!

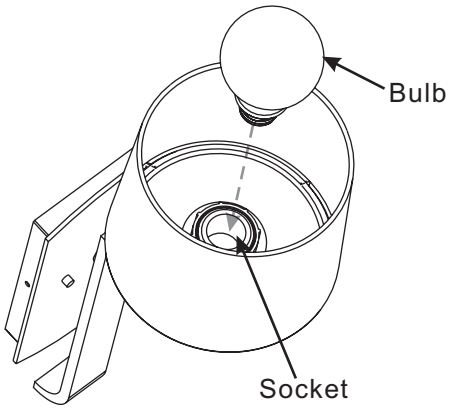

Figure 7

Thank you for purchasing a Quoizel product.
Need assistance with parts or assembly? Call Quoizel customer service at 1-631-273-2700
or visit us on-line at www.quoizel.com

c 2011 Quoizel Inc.

November2011