QUOIZEL
6 CORPORATE PARKWAY
GOOSE CREEK, SC. 29445
www. quoizel. com

INSTALLATION INSTRUCTIONS

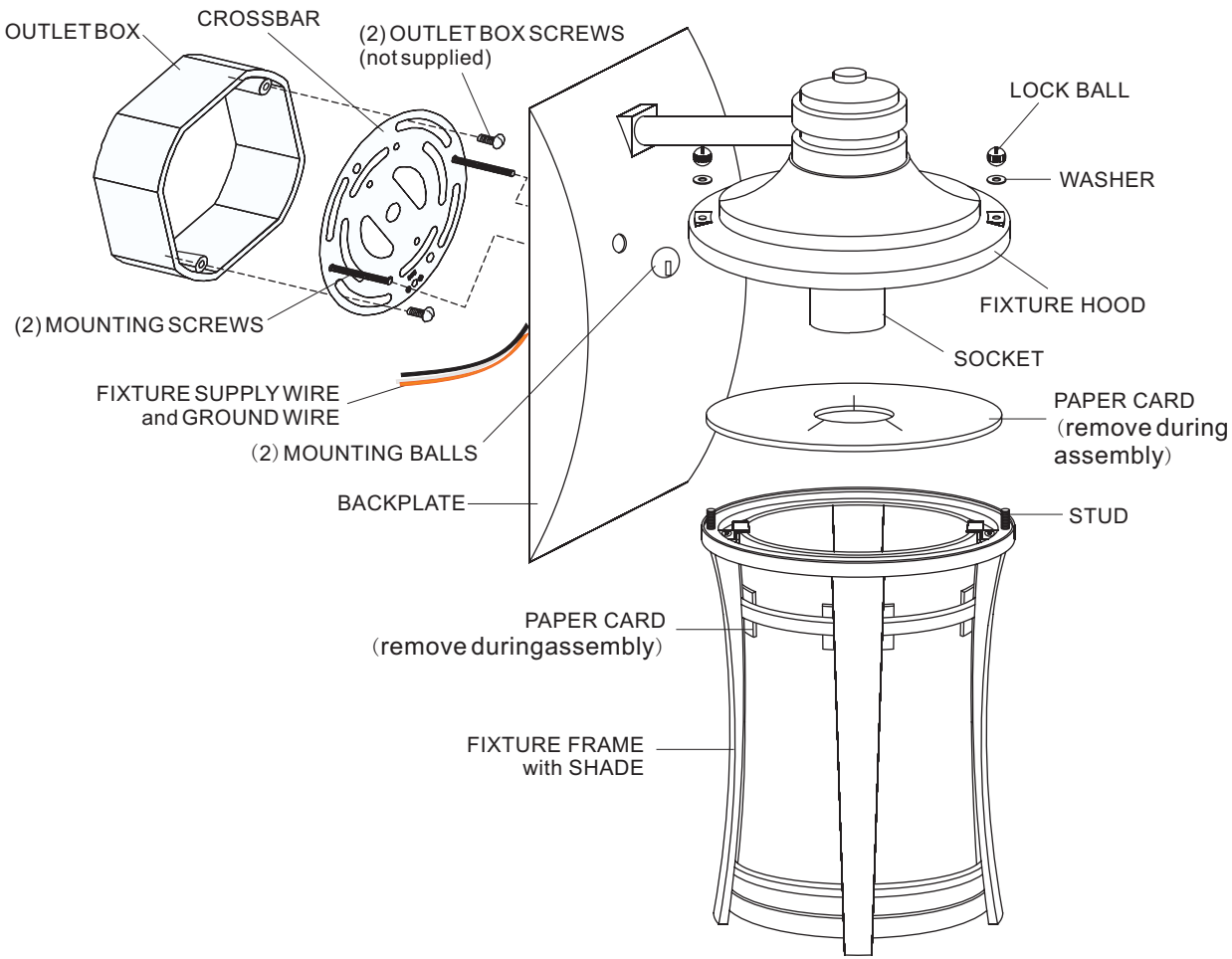

1. Before beginning installation, carefully unpack and identify all parts referring to the illustration.

2. Turn power to installation point OFF at the circuit breaker.

3. Install the correct bulb referring to the fixture markings and/or labels fox maximum wattage.

4. Remove the PAPER CARD from the top of the FIXTURE FRAME and discard it. Lift the FIXTURE FRAME and SHADE upward, aligning the STUDS through the holes on the FIXTURE HOOD. Secure them together by threading the LOCK BALLS onto the STUDS and hand tighten both until snug.

5. Place the CROSSBAR on the BACKPLATE and align the holes in the BACKPLATE with a set of threaded holes in the CROSSBAR. Install the (2) MOUNTING SCREWS in the aligned threaded holes on the CROSSBAR. Next, mount the CROSSBAR to the outlet box with (2)OUTLET BOX SCREWS (not provided).

6. ***Make the connections:***
   Use wire connectors(not supplied) and connect the HOUSE GROUND to the FIXTURE GROUND WIRE ; attach the HOUSE WHITE WIRE to the FIXTURE WHITE (or RIBBED SIDE) SUPPLY WIRE; connect the HOUSE BLACK (or RED) WIRE to the FIXTURE BLACK (or SMOOTH SIDE) WIRE. Wrap each connection with approved electrical tape.

7. Carefully tuck all wires into the OUTLET BOX. Align the HOLES in the BACKPLATE with the (2) MOUNTING SCREWS attached to the CROSSBAR. Pass the fixture over the (2) MOUNTING SCREWS and secure against the surface by threading (2)MOUNTING BALLS onto end of the screws. Tighten until snug.

8. Refer to Page 2 for fixture caulking instructions.

9. Restore power to the installation point ON. Retain this sheet for future reference.

IF IN DOUBT ABOUT ELECTRICAL INSTALLATION, CONSULT A LICENSED ELECTRICIAN!

QUOIZEL
6 CORPORATE PARKWAY
GOOSE CREEK, SC. 29445
www. quoizel. com

WALL SURFACE MOUNTED OUTDOOR FIXTURE CAULKING INSTRUCTIONS

With the OUTDOOR FIXTURE properly installed in accordance with supplied assembly/installation instructions, proceed with caulking instructions below.
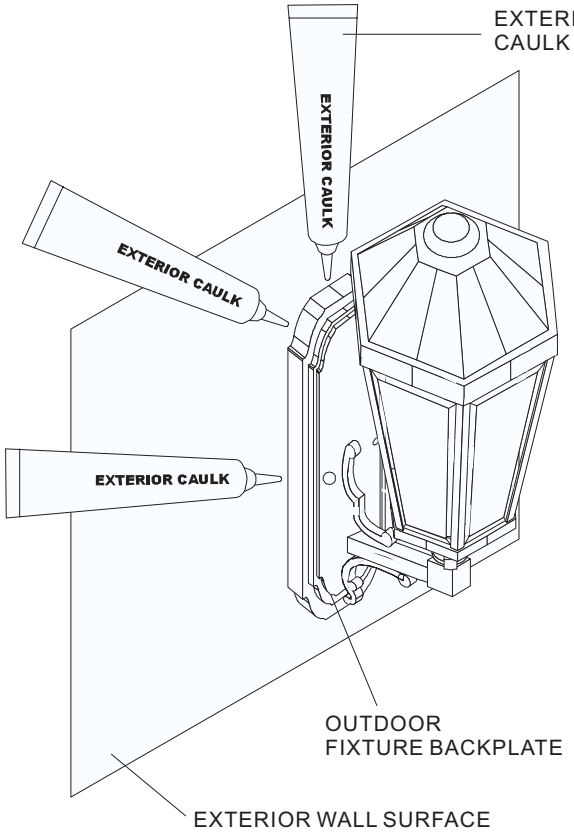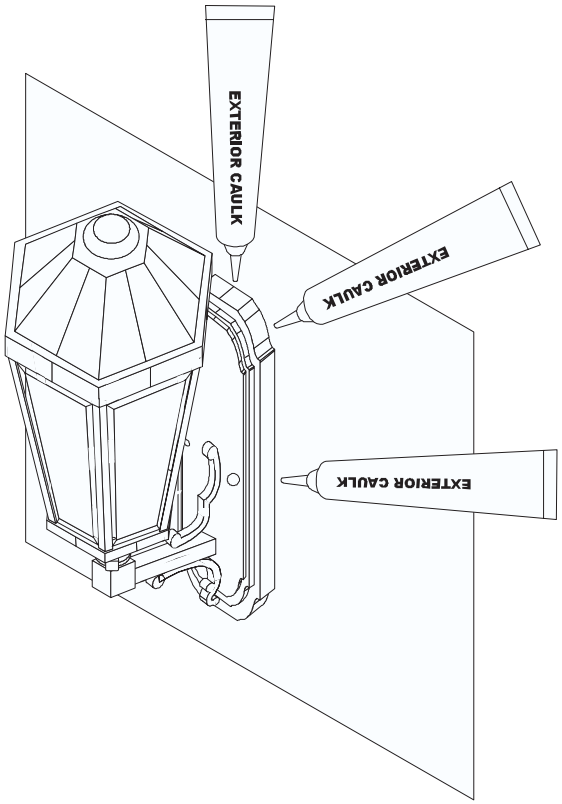
Note: Be sure EXTERIOR WALL SURFACE and FIXTURE BACKPLATE are free to dirt to caulking. Using EXTERIOR GRADE CAULK, start on one side of FIXTURE BACKPLATE and follow contour, were the FIXTURE BACKPLATE meets the EXTERIOR WALL SURFACE upward. Proceed to caulk over top of backplate and down other side. **DO NOT CAULK BOTTOM OF FIXTURE BACKPLATE** to ensure proper moisture drainage.