HINKLEY LIGHTING

design • illuminate • enjoy

Assembly Instructions

Item No. 2374

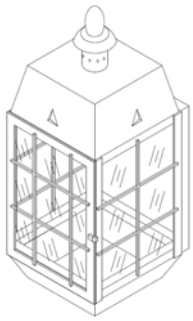

start here

Drawing 1 – Fixture Assembly

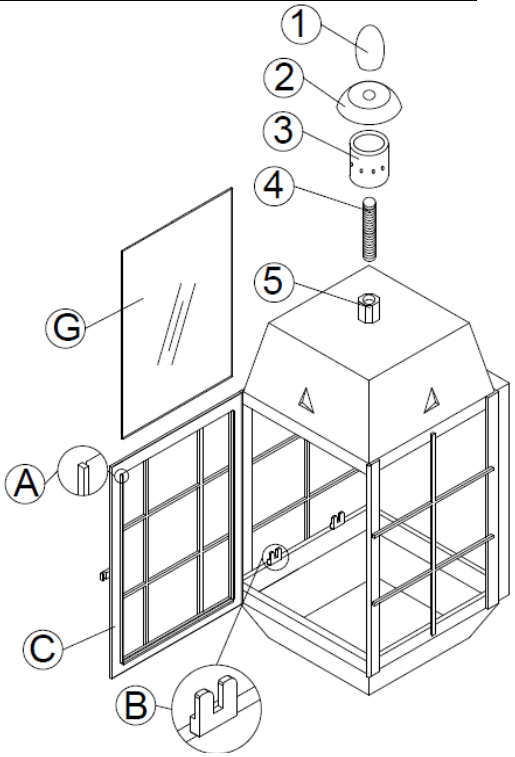

Drawing 2 – Fixture Mounting

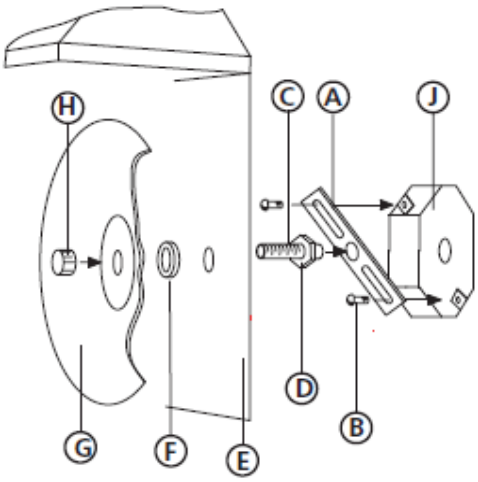

1

1. Find a clear area in which you can work.
2. Unpack Fixture and glass from carton.
3. Carefully Review Instructions Prior to assembly.

****** The construction of this fixture will be accomplished by first assembling the main body of the fixture, installing the glass, attaching the mounting strap to the junction box, making all necessary electrical connections, and mounting fixture to wall.***

2

1. To install glass, slide glass panel **(G)** into the glass holder **(A)** in the door **(C)**. - see **Drawing 1**.
2. To install glass into fixture sides place the glass between the glass clips **(B)** and fold back the clips over the glass to hold it in place.

3

1. To assemble the fixture top first Thread the nipple **(4)** into the hex coupling **(5).** - see **Drawing 1**.
2. Align the decorative cylinder **(3)** over the hex coupling. **(5)**.
3. Slip the decorative cap **(2)** on top of the decorative cylinder **(3)** and over the nipple **(4)** thread the decorative ball **(1)** onto the nipple **(4)**.
4. Fixture can be installed at this time.

SAFETY WARNING: READ WIRING AND GROUNDING INSTRUCTIONS (I.S. 18) AND ANY ADDITIONAL DIRECTIONS. TURN POWER SUPPLY OFF DURING INSTALLATION. IF NEW WIRING IS REQUIRED, CONSULT A QUALIFIED ELECTRICIAN OR LOCAL AUTHORITIES FOR CODE REQUIREMENTS.

4

Make electrical connections from supply wire to fixture lead wires. Refer to instruction sheet **(I.S. 18)** and follow all instructions to make all necessary wiring connections. Then refer back to this sheet to continue installation of this fixture.

5

1. To mount fixture, slip center hole of back plate **(E)** over threaded tube **(C)** and hold fixture in position - see **Drawing 2**.
2. Thread decorative nut **(F)** onto end of threaded tube **(C)** and tighten to secure fixture.
3. Slip reflector **(G)** onto threaded tube **(C).**
4. To complete assembly thread barrel knob **(H)** onto end of threaded tube **(C)** and tighten.

HINKLEY LIGHTING

design • illuminate • enjoy

I.S. 18 wiring | grounding instructions

SAFETY WARNING: READ WIRING AND GROUNDING INSTRUCTIONS (I.S. 18) AND ANY ADDITIONAL DIRECTIONS. TURN POWER SUPPLY OFF DURING INSTALLATION. IF NEW WIRING IS REQUIRED, CONSULT A QUALIFIED ELECTRICIAN OR LOCAL AUTHORITIES FOR CODE REQUIREMENTS.

Drawing 1 - Flush Mount

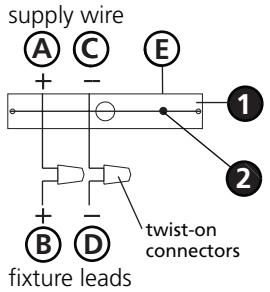

Drawing 2 - Chain Hung

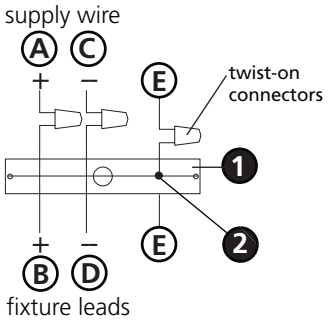

Drawing 3 - Post-Mount

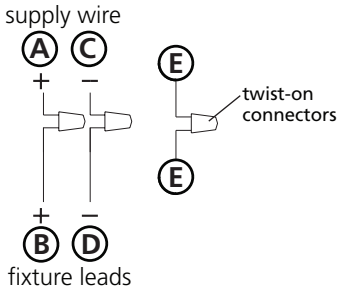

wiring instructions

Indoor Fixtures

1. Connect positive supply wire **(A)** (typically black or the smooth, unmarked side of the two-conductor cord) to positive fixture lead **(B)** with appropriately sized twist on connector - see **Drawings 1 or 2**.

2. Connect negative supply wire **(C)** (typically white or the ribbed, marked side of the two-conductor cord) to negative fixture lead **(D)**.

3. Please refer to the **grounding instructions** below to complete all electrical connections.

Outdoor Fixtures

1. Connect positive supply wire **(A)** (typically black or the smooth unmarked side of the two-conductor cord) to positive fixture lead **(B)** with appropriately sized twist on connector - see **Drawings 2 or 3**.

2. Connect negative supply wire **(C)** (typically white or the ribbed, marked side of the two-conductor cord) to negative fixture lead **(D)**.

3. Cover open end of connectors with silicone sealant to form a watertight seal.

• If installing a wall mount fixture, use caulk to seal gaps between the fixture mounting plate (backplate) and the wall. This will help prevent water from entering the outlet box. If the wall surface is lap siding, use caulk and a fixture mounting platform specially.

4. Please refer to the **grounding instructions** below to complete all electrical connections.

grounding instructions

Flush Mount Fixtures
For positive grounding in a 3-wire electrical system, fasten the fixture ground wire **(E)** (typically copper or green plastic coated) to the fixture mounting strap **(1)** with the ground screw **(2)** - see **Drawing 1**.
Note: On straps for screw supported fixtures, first install the two mounting screws in strap. Any remaining tapped hole may be used for the ground screw.

Chain Hung Fixtures
Loop fixture ground wire **(E)** (typically copper or green plastic coated) under the head of the ground screw **(2)** on fixture mounting strap **(1)** and connect to the loose end of the fixture ground wire directly to the ground wire of the building system with appropriately sized twist-on connectors - see **Drawing 2**.

Post-Mount Fixtures
Connect fixture ground wire **(E)** (typically copper or green plastic coated) to power supply ground with appropriately sized twist-on connector inside post. Cover open end of connector with silicone sealant to form a watertight seal - see **Drawing 3**.

HINKLEY LIGHTING

design • illuminate • enjoy

I.S.200 Caulking Instruction

I.S. 200

start here

1. After securing fixture to the wall it is recommended that the gap between the wall and the fixture backplate be sealed with any good quality waterproof caulk or silicone sealant, on the top and sides leaving the bottom open as a weep hole.
   (NOT INCLUDED) see Drawing 1.

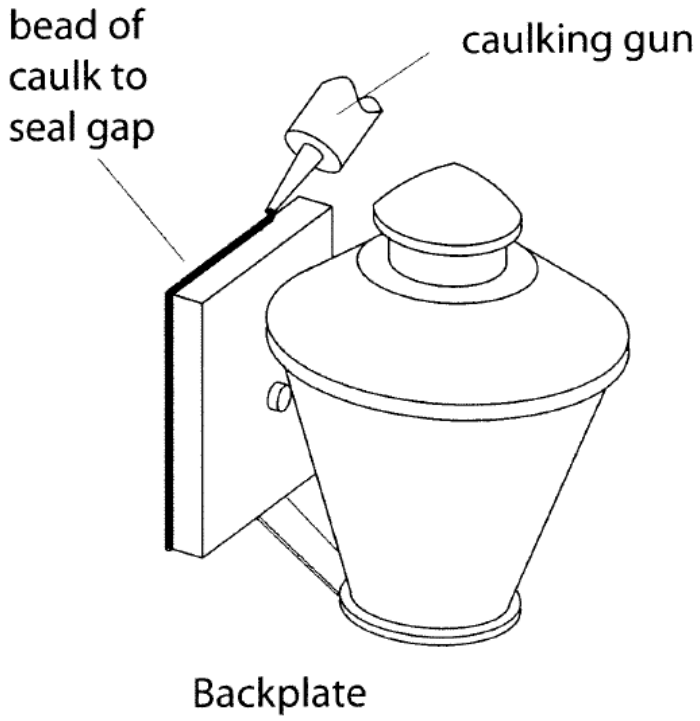

Drawing 1