HINKLEY
LIGHTING

assembly instructions

1420

Item No. 1420

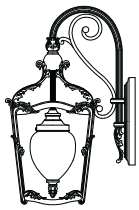

Drawing 1 - Strap Detail

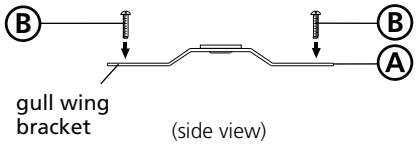

Drawing 2 - Fixture Mounting

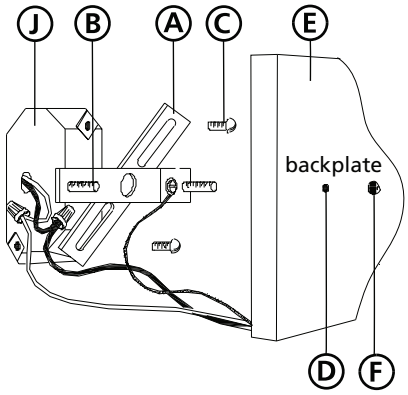

Drawing 3 - Fixture Assembly

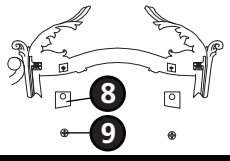

Drawing 4 - Fixture Assembly

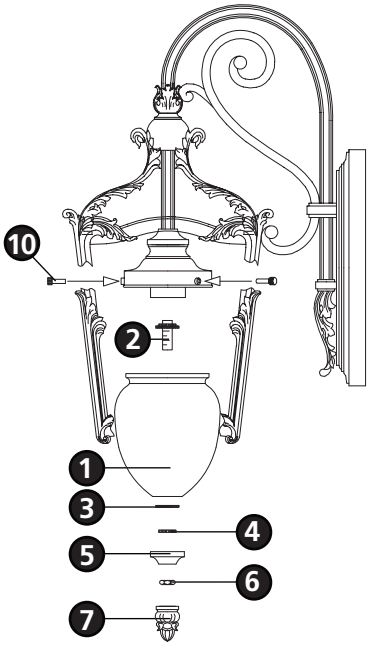

start here

1

1. Find a clear area in which you can work.

2. Unpack fixture and glass from carton.

3. Carefully review instructions prior to assembly.

****** The construction of this fixture will be accomplished by first assembling the interior glass globe, installing the glass in the cage assembly, attaching the mounting hardware to the junction box, making all necessary electrical connections and then mounting the fixture to the wall.***

2

1. Insert threaded tube **(2)** with knurl nut and washer, through the center hole in the bottom of the glass globe **(1)** and hold in position - see **Drawing 4**.

2. Slip washer **(3)** onto exposed end of threaded tube **(2)**.

3. Thread knurl nut **(4)** onto threaded tube **(2)** and hand-tighten only.

4. Slip cap **(5)** and thread hex nut **(6)** onto threaded tube **(2)** and hand-tighten.

5. Thread finial **(7)** onto end of threaded tube **(2)** and hand-tighten.

6. Set globe **(1)** aside to be installed later.

3

1. To install glass, remove glass clips **(8)** by using a Philips screwdriver to remove screw **(9)** from inside the top edge of the cage - see **Drawings 3 and 4**.

2. Tilt glass panels at an angle and insert them through the panel opening on the side of the cage. Place bottom of glass behind the tab in the bottom of the cage.

3. After all panels are inserted replace the glass clips **(8)** removed earlier.

4

1. Prepare mounting strap **(A)** by threading the two 1 1/4" long mounting screws **(B)** into the back of the gull wing bracket - see **Drawing 1**.

• Be sure the holes into which the screws are threaded match the spacing of holes **(D)** in the back plate **(E)** - see **Drawings 1 and 2**.

2. Attach mounting strap **(A)** to junction box **(J)** using two 1" screws **(C)** not provided - see **Drawing 2.**

SAFETY WARNING: READ WIRING AND GROUNDING INSTRUCTIONS (I.S. 18) AND ANY ADDITIONAL DIRECTIONS. TURN POWER SUPPLY OFF DURING INSTALLATION. IF NEW WIRING IS REQUIRED, CONSULT A QUALIFIED ELECTRICIAN OR LOCAL AUTHORITIES FOR CODE REQUIREMENTS.

Make electrical connections from supply wire to fixture lead wires. Refer to instruction sheet **(I.S. 18)** and follow all instructions to make all necessary wiring connections. Then refer back to this sheet to continue installation of this fixture.

5

1. Slide backplate **(E)** over screws **(B)** and secure with ball knobs **(F)** - see **Drawing 2**.

6

1. Fixture can now be lamped accordingly.

2. Install interior globe **(1)** using the small thumb screws **(10)** provided - see **Drawing 4**.

12.10.08

HINKLEY LIGHTING 33000 Pin Oak Parkway Avon Lake, OH 44012 800.446.5539 / 440.653.5500 hinkleylighting.com

HINKLEY
LIGHTING

I.S. 18 wiring | grounding instructions

SAFETY WARNING: READ WIRING AND GROUNDING INSTRUCTIONS (I.S. 18) AND ANY ADDITIONAL DIRECTIONS. TURN POWER SUPPLY OFF DURING INSTALLATION. IF NEW WIRING IS REQUIRED, CONSULT A QUALIFIED ELECTRICIAN OR LOCAL AUTHORITIES FOR CODE REQUIREMENTS.

Drawing 1 - Flush Mount

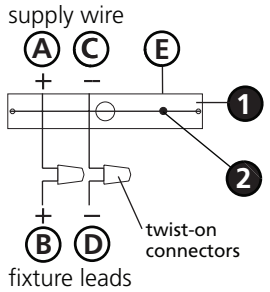

Drawing 2 - Chain Hung

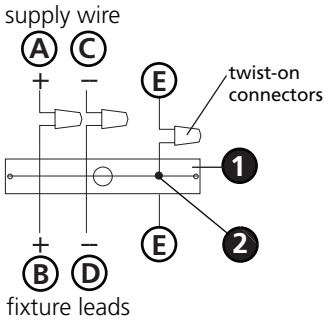

Drawing 3 - Post-Mount

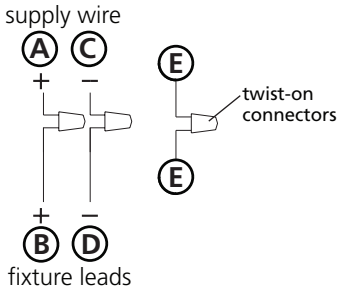

wiring instructions

Indoor Fixtures

1. Connect positive supply wire **(A)** (typically black or the smooth, unmarked side of the two-conductor cord) to positive fixture lead **(B)** with appropriately sized twist on connector - see **Drawings 1 or 2**.

2. Connect negative supply wire **(C)** (typically white or the ribbed, marked side of the two-conductor cord) to negative fixture lead **(D)**.

3. Please refer to the **grounding instructions** below to complete all electrical connections.

Outdoor Fixtures

1. Connect positive supply wire **(A)** (typically black or the smooth unmarked side of the two-conductor cord) to positive fixture lead **(B)** with appropriately sized twist on connector - see **Drawings 2 or 3**.

2. Connect negative supply wire **(C)** (typically white or the ribbed, marked side of the two-conductor cord) to negative fixture lead **(D)**.

3. Cover open end of connectors with silicone sealant to form a watertight seal.

• If installing a wall mount fixture, use caulk to seal gaps between the fixture mounting plate (backplate) and the wall. This will help prevent water from entering the outlet box. If the wall surface is lap siding, use caulk and a fixture mounting platform specially.

4. Please refer to the **grounding instructions** below to complete all electrical connections.

grounding instructions

Flush Mount Fixtures
For positive grounding in a 3-wire electrical system, fasten the fixture ground wire **(E)** (typically copper or green plastic coated) to the fixture mounting strap **(1)** with the ground screw **(2)** - see **Drawing 1**.
Note: On straps for screw supported fixtures, first install the two mounting screws in strap. Any remaining tapped hole may be used for the ground screw.

Chain Hung Fixtures
Loop fixture ground wire **(E)** (typically copper or green plastic coated) under the head of the ground screw **(2)** on fixture mounting strap **(1)** and connect to the loose end of the fixture ground wire directly to the ground wire of the building system with appropriately sized twist-on connectors - see **Drawing 2**.

Post-Mount Fixtures
Connect fixture ground wire **(E)** (typically copper or green plastic coated) to power supply ground with appropriately sized twist-on connector inside post. Cover open end of connector with silicone sealant to form a watertight seal - see **Drawing 3**.

I.S.200 caulking instructions

start here

1. After securing fixture to the wall it is recommended that the gap between the wall and fixture backplate be sealed with any good quality waterproof caulk or silicone sealant. (NOT INCLUDED) See Drawing 1.

Drawing 1

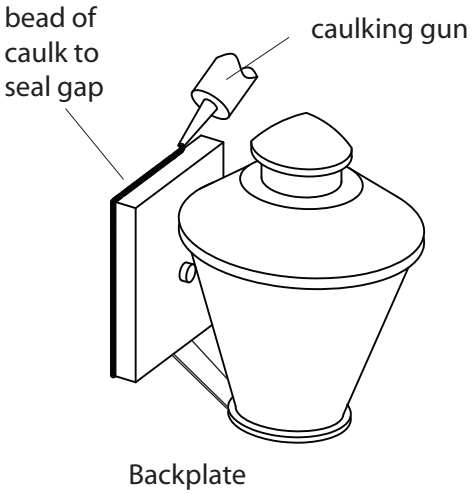

1. After securing fixture in place it is recommended that the gap between the mounting top and fixture base be sealed with any good quality waterproof caulk or silicone sealant. (NOT INCLUDED). It is also recommended that a small bead of caulk or sealant be put under the ball knobs used to mount fixture. See Drawing 2.

Drawing 2

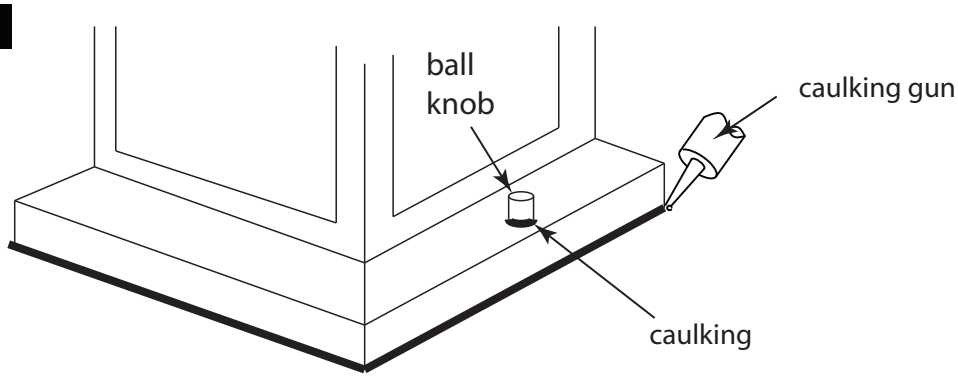

HINKLEY LIGHTING 33000 Pin Oak Parkway Avon Lake, OH 44012 800.446.5539 / 440.653.5500 hinkleylighting.com